higher education & training

Department:
Higher Education and Training
REPUBLIC OF SOUTH AFRICA

MARKING GUIDELINE

NATIONAL CERTIFICATE

NOVEMBER EXAMINATION

BUILDING DRAWING N1

14 NOVEMBER 2016

This marking guideline consists of 8 pages.

Copyright reserved

QUESTION 1

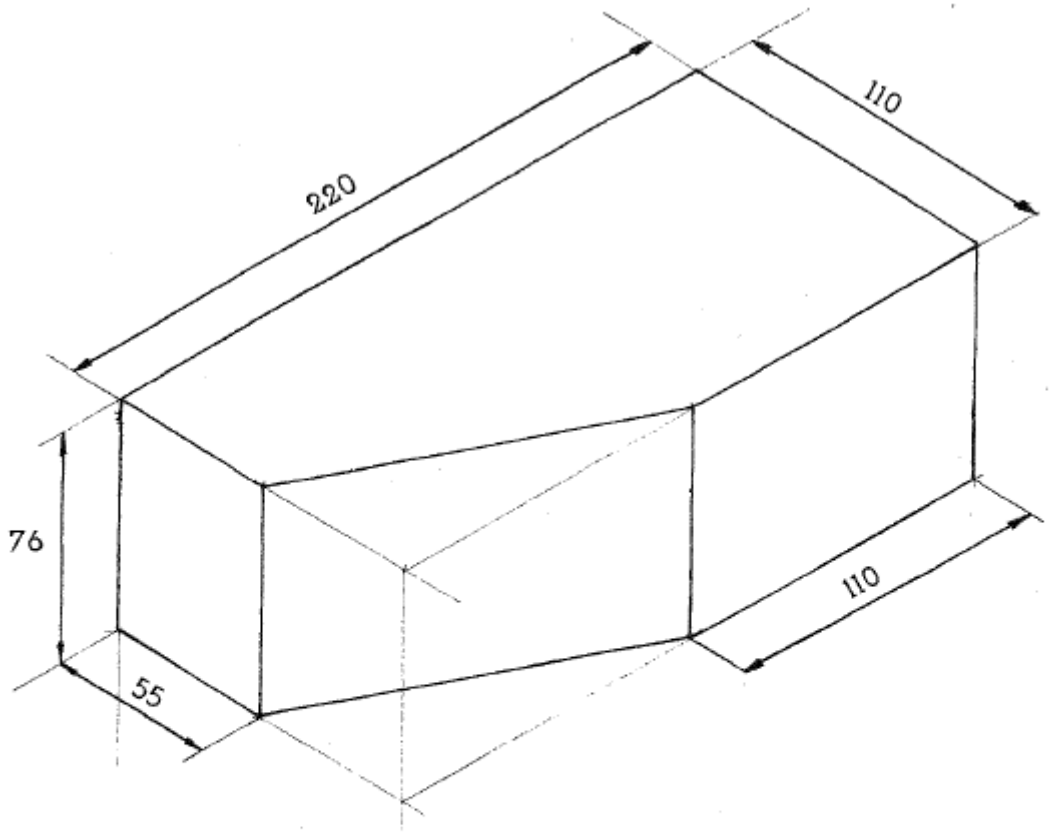

THE ISOMETRIC VIEW OF A KING CLOSER BRICK

MARKING CRITERIA	POSSIBLE MARK
CORRECTNESS	3
DIMENSIONS	3
NEATNESS OF LAYOUT	2
SCALE	2
TOTAL	10

[10]

QUESTION 2

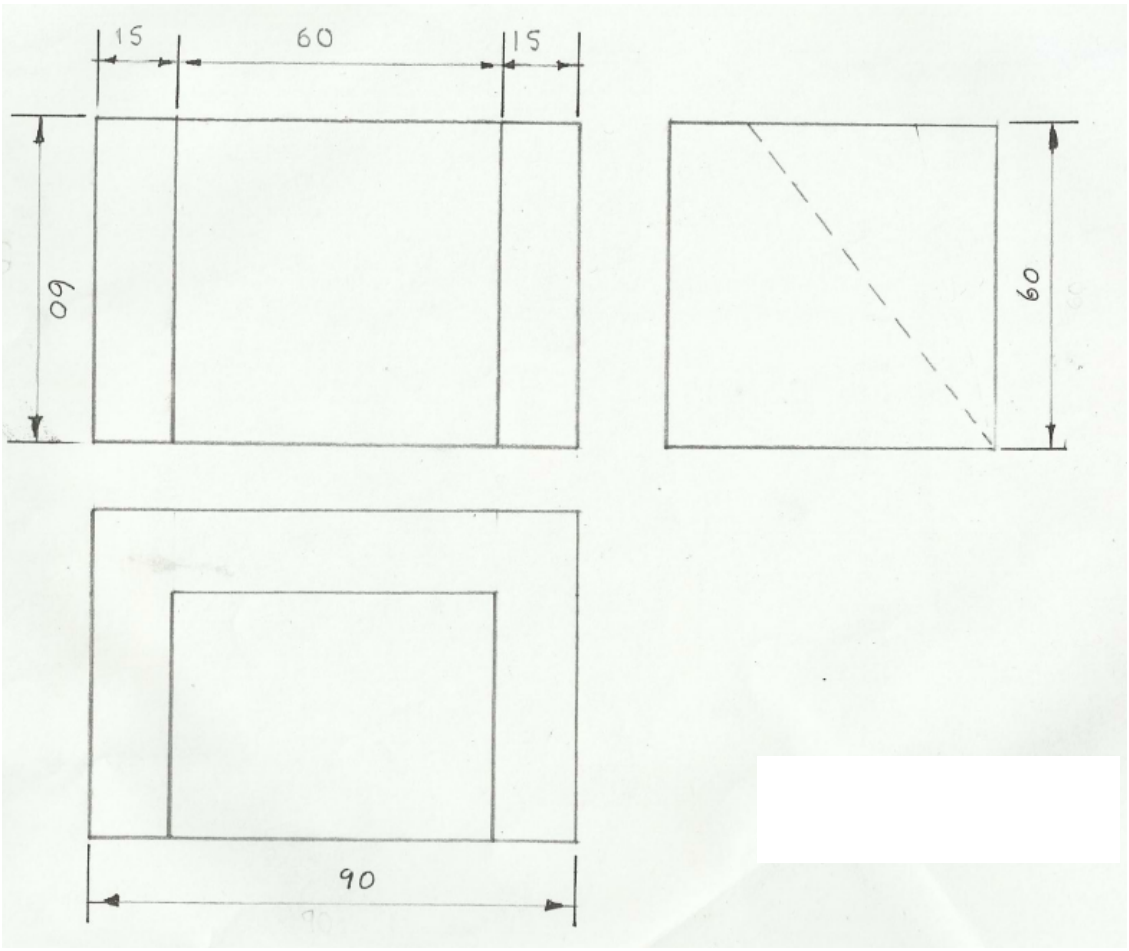

WOODEN BLOCK
SCALE 1 : 1

MARKING CRITERIA	POSSIBLE MARK
FRONT VIEW	5
LEFT VIEW	5
TOP VIEW	5
NEATNESS OF LAYOUT	3
SCALE	2
TOTAL	20

[20]

QUESTION 3

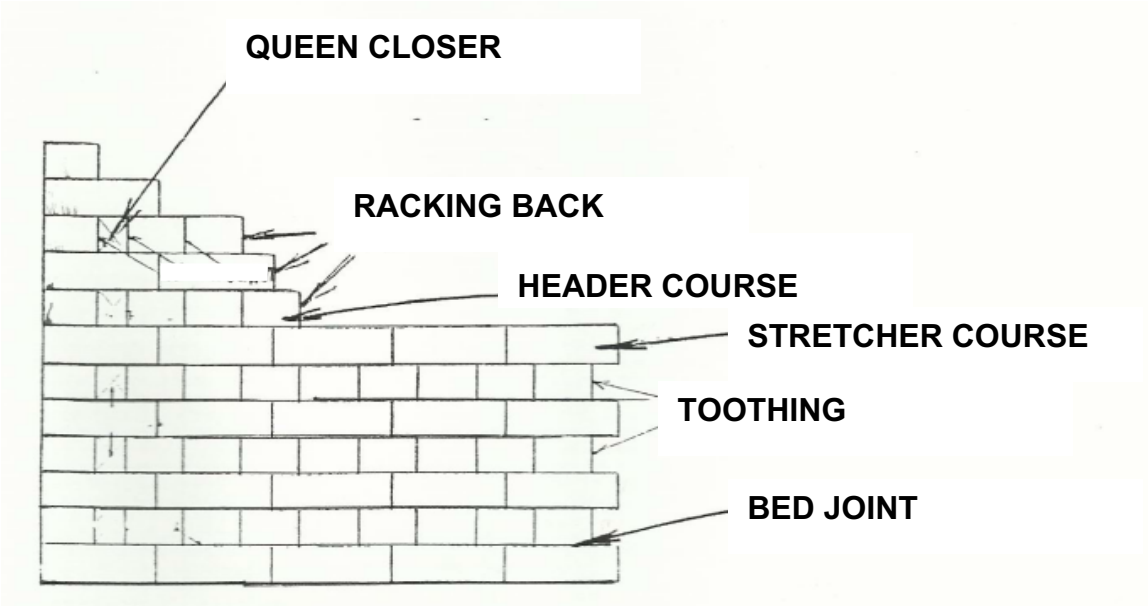

SCALE 1 : 10

MARKING CRITERIA	POSSIBLE MARK
BRICK PATTERN	3
ACCURACY	2
CORRECTNESS	1
NEATNESS OF LAYOUT	2
LABELS	1
SCALE	1
TOTAL	10

[10]

QUESTION 4

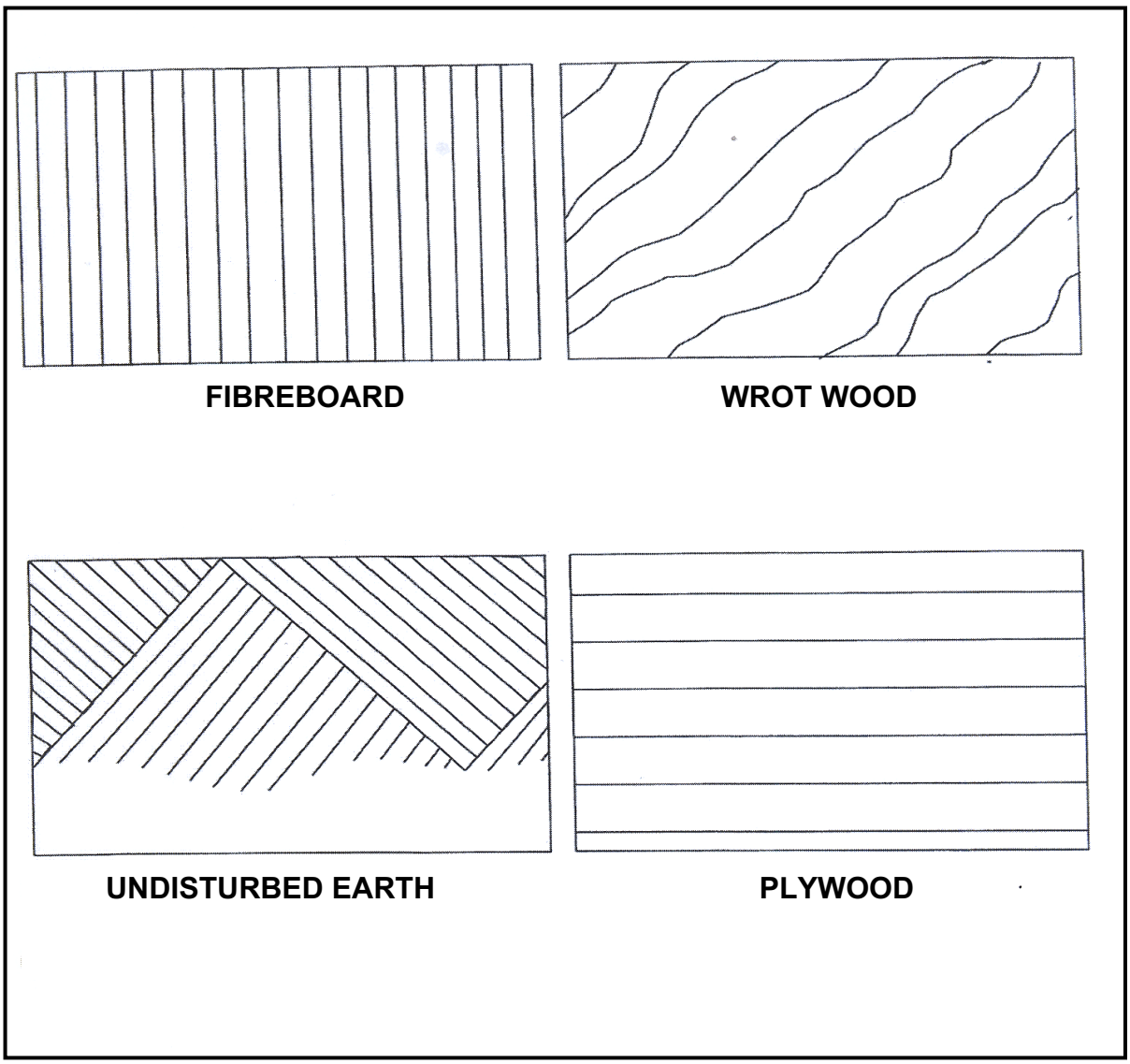

(4 × 4) **[16]**

QUESTION 5

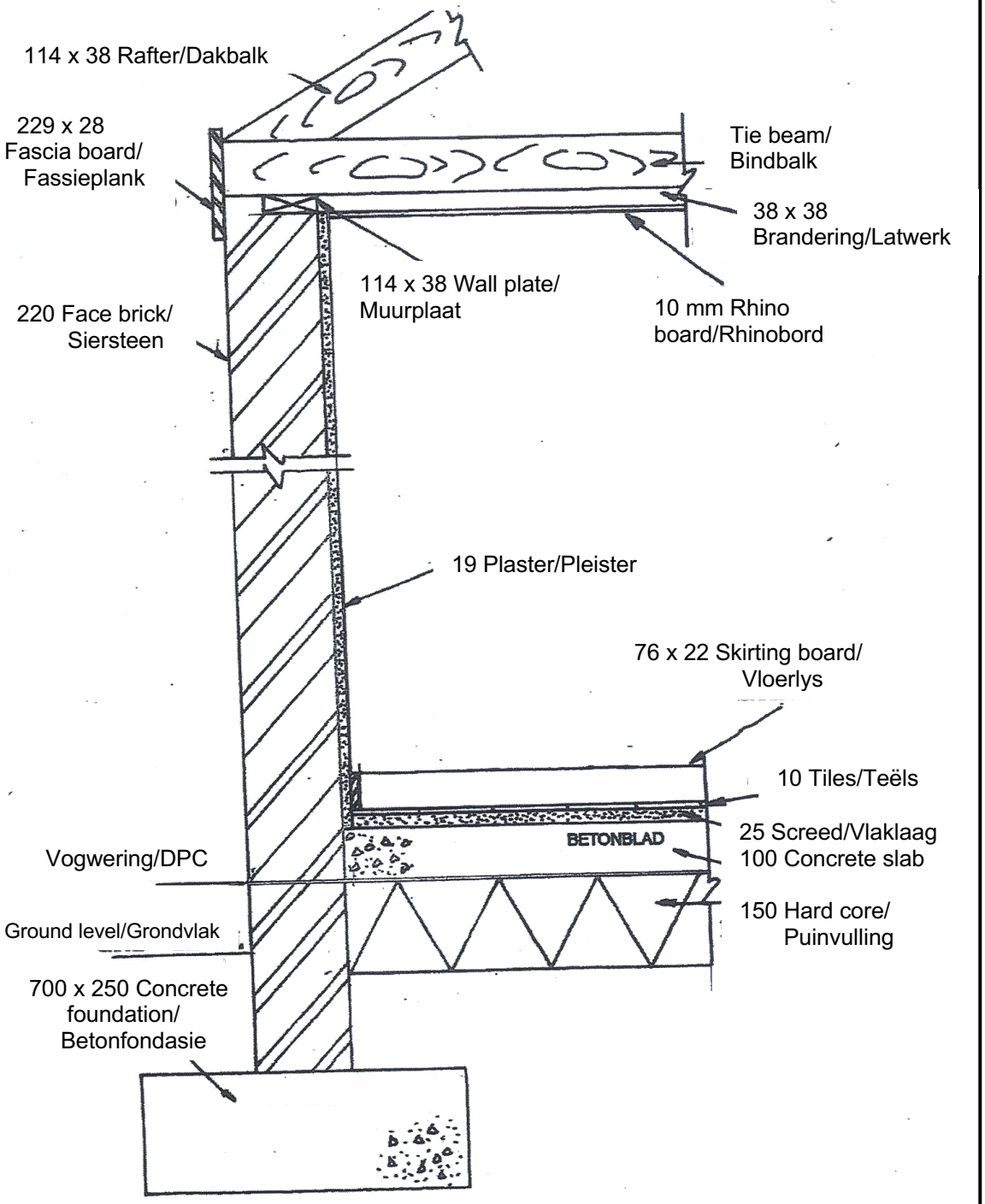

VERTICAL CROSS SECTION THROUGH AN EXTERNAL ONE-BRICK WALL
SCALE 1 : 10

MARKING CRITERIA	POSSIBLE MARK
700 mm × 250 mm strip foundation	2
100 mm solid concrete floor	2
150 mm hard core	2
DPC	2
25 mm screed	2
10 mm thick floor tiles	2
76 mm × 22 mm skirting	2
19 mm plaster	2
114 mm × 38 mm tie beam	1
114 mm × 38 mm rafter	1
38 mm × 28 mm brandering	1
229 mm × 28 mm flush fascia board (no overhang)	1
10 mm Rhino board	1
114 mm × 38 mm wall plate	1
ACCURACY	2
CORRECTNESS	2
NEATNESS OF LAYOUT	2
SCALE	2
TOTAL	30

[30]

Copyright reserved

QUESTION 6

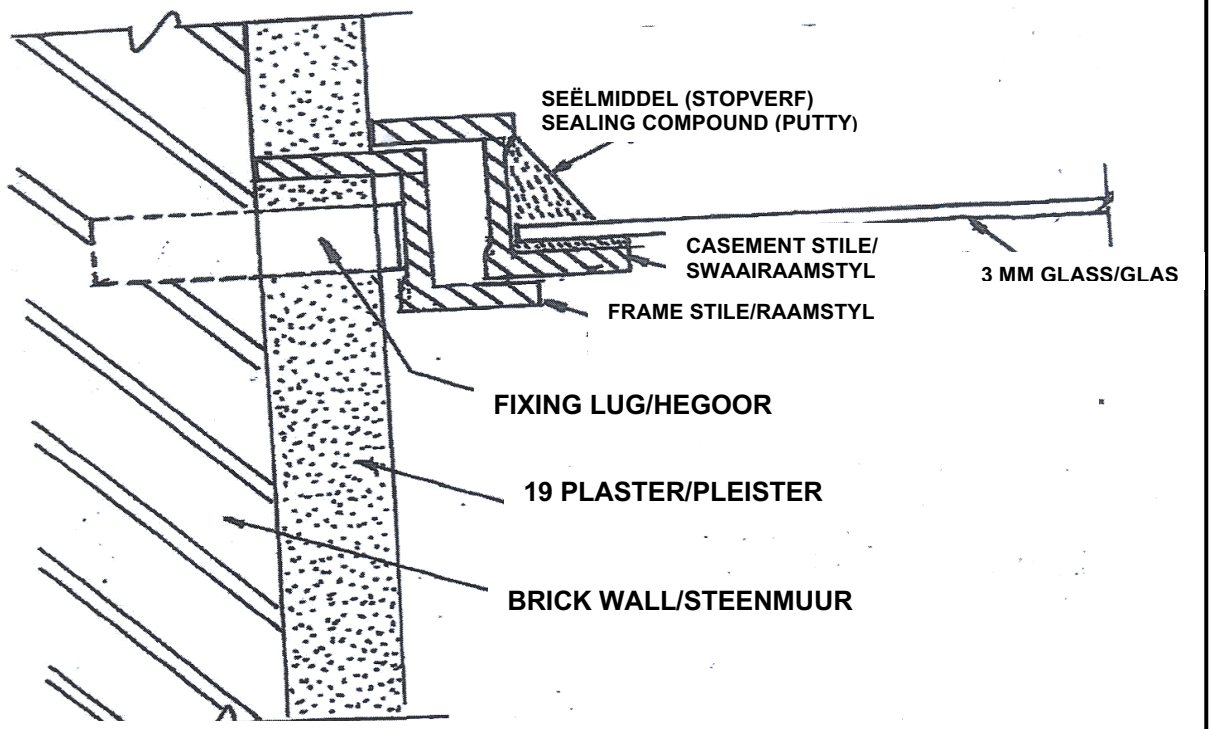

HORIZONTAL CROSS SECTION OF A STEEL CASEMENT WINDOW
SCALE 1 : 1

MARKING CRITERIA	POSSIBLE MARK
• A portion of the adjacent brick opening • Steel fixing lug	1
Internal plaster	1
Steel casement	1
Style	1
3 mm glass	1
Sealing compound (putty)	1
ACCURACY	2
CORRECTNESS	2
NEATNESS OF LAYOUT	2
SCALE	2
TOTAL	14

[14]

TOTAL: 100

Copyright reserved