higher education & training

Department:
Higher Education and Training
REPUBLIC OF SOUTH AFRICA

T150(E)(N21)T
NOVEMBER EXAMINATION

NATIONAL CERTIFICATE

BUILDING DRAWING N1

(8090001)

21 November 2014 (Y-Paper)
13:00–17:00

This question paper consists of 4 pages and a 1 diagram sheet.

ENGINEERING

Copyright reserved

DEPARTMENT OF HIGHER EDUCATION AND TRAINING
REPUBLIC OF SOUTH AFRICA

NATIONAL CERTIFICATE
BUILDING DRAWING N1
TIME: 4 HOURS
MARKS: 100

INSTRUCTIONS AND INFORMATION

1. Answer ALL the questions.
2. Read ALL the questions carefully.
3. Number the answers according to the numbering system used in this question paper.
4. Marks will allocated for neat work that is well-set out and organised.
5. Marks will also be allocated for line quality and labelling of drawings.
6. Write neatly and legibly.

ENGINEERING

Copyright reserved

QUESTION 1

Draw the orthographic views of the attached sheet FIGURE 1.

SCALE1 : 1 **[16]**

QUESTION 2

Draw the front elevation of a one brick wall in English bond six courses high. The bottom course must be SEVEN bricks long.

Show a stopped end on the left and a raking back on the right side.

SCALE 1 : 10 **[8]**

QUESTION 3

Draw an elliptical gauged arch with the span of 1 200 mm and the rise of 400 mm.

SCALE 1 : 10

NOTE: Show the key brick.

Do NOT show any adjacent brickwork. **[18]**

QUESTION 4

Draw FOUR rectangles 750 mm × 500 mm evenly spaced showing the following hatching symbols in the rectangles:

Stock bricks (4)

Face bricks (4)

Stonework (4)

Block work (4)

NOTE: Arrange the rectangles neatly and allow a space of 25 mm between the rectangles.

SCALE 1 : 10 **[16]**

ENGINEERING

Copyright reserved

QUESTION 5

Draw an isometric view of a THREE quarter bat.

NOTE: Your preferred view may be illustrated.

Do NOT show any hidden detail.

SCALE 1 : 2 **[12]**

QUESTION 6

Draw a vertical cross section through an external one brick wall of a dwelling that has the following details.

Substructure

700 × 250 mm Strip foundation

100 mm solid concrete floor

150 mm hard core

DPC

25 mm screed

10 mm floor tiles

76 mm × 22 mm skirting

19 mm plaster

ONE brick wall built with face bricks.

Superstructure

114 mm × 38 mm tie beam

114 mm × 38 mm rafter

38 mm × 38 mm brandering

229 mm × 28 mm flush fascia board (No overhang)

114 mm × 38 mm wall plate

10 mm Rhino board

SCALE 1 : 10

NOTE: Do NOT indicate any roof covering. **[30]**

TOTAL: 100

Copyright reserved

ENGINEERING

DIAGRAM SHEET

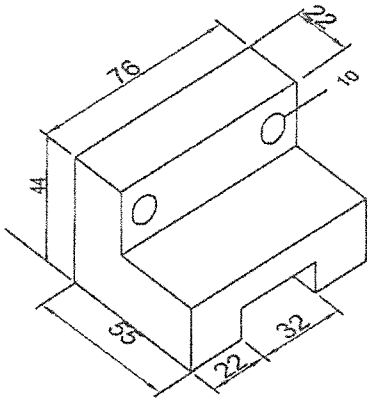

MACHINE PART

SCALE 1 : 1

ENGINEERING

Copyright reserved

higher education & training

Department:
Higher Education and Training
REPUBLIC OF SOUTH AFRICA

MARKING GUIDELINE

NATIONAL CERTIFICATE

NOVEMBER EXAMINATION

BUILDING DRAWING N1

21 NOVEMBER 2014

This marking guideline consists of 10 pages.

Copyright reserved

QUESTION 1

MACHINE PART			
MARKING CRITERIA	**POSSIBLE MARK**	**MARKER MARK**	**MOD MARK**
CORRECT POSITION	6		
SIZE CORRECT	6		
LINEWORK/NEATNESS	3		
TITLE SCALE	1		
TOTAL:	16		

Copyright reserved

QUESTION 1

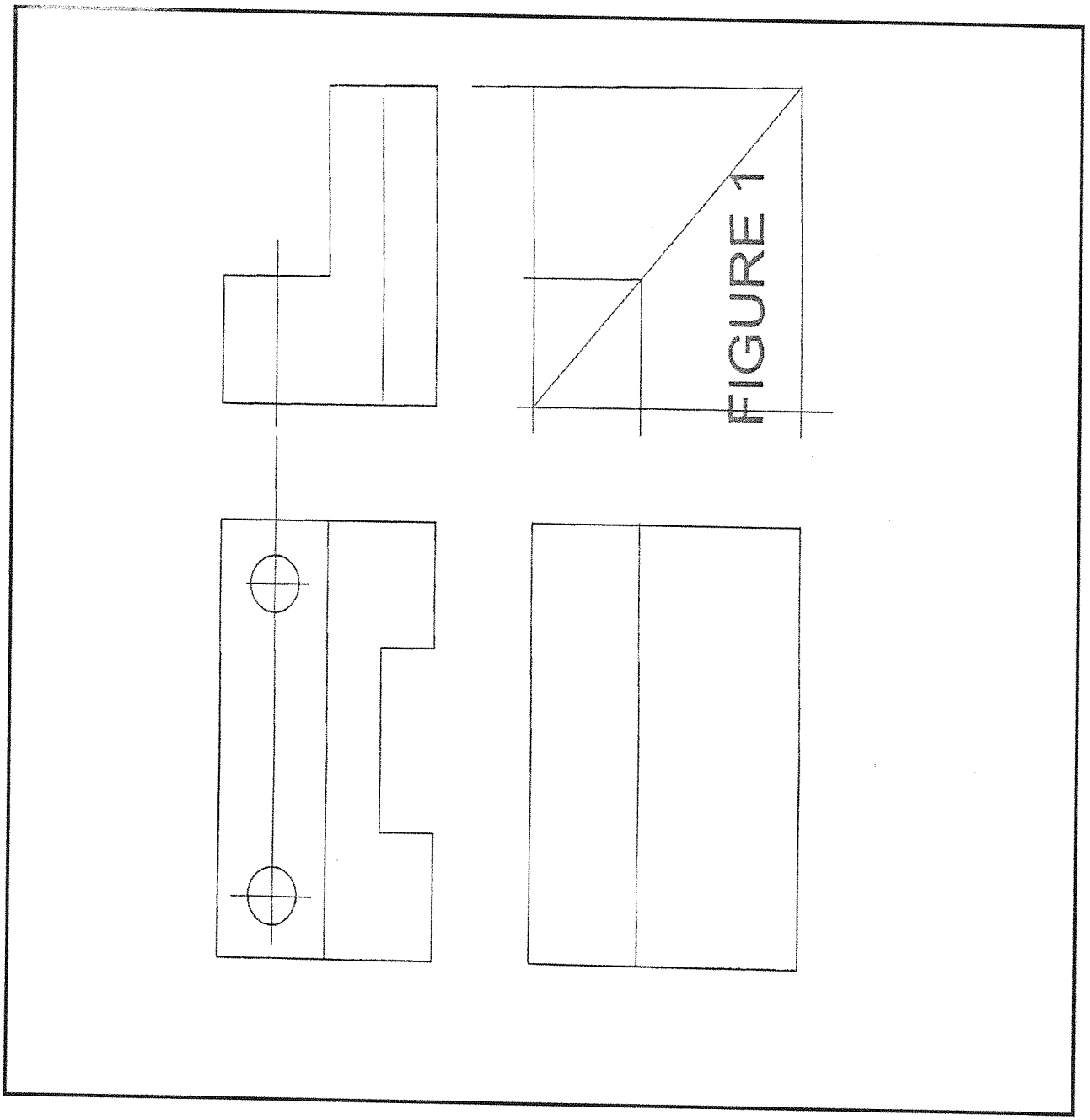

Copyright reserved

QUESTION 2

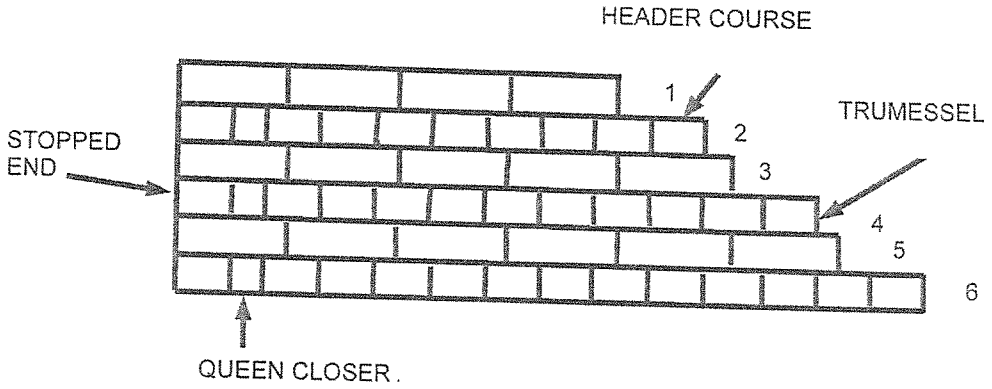

THE FRONT ELEVATION OF A WALL BUILT IN ENGLISH BOND INCLUDES A STOPPED END AND RAKING BACK

SCALE 1 : 10

[8]

Copyright reserved

QUESTION 3

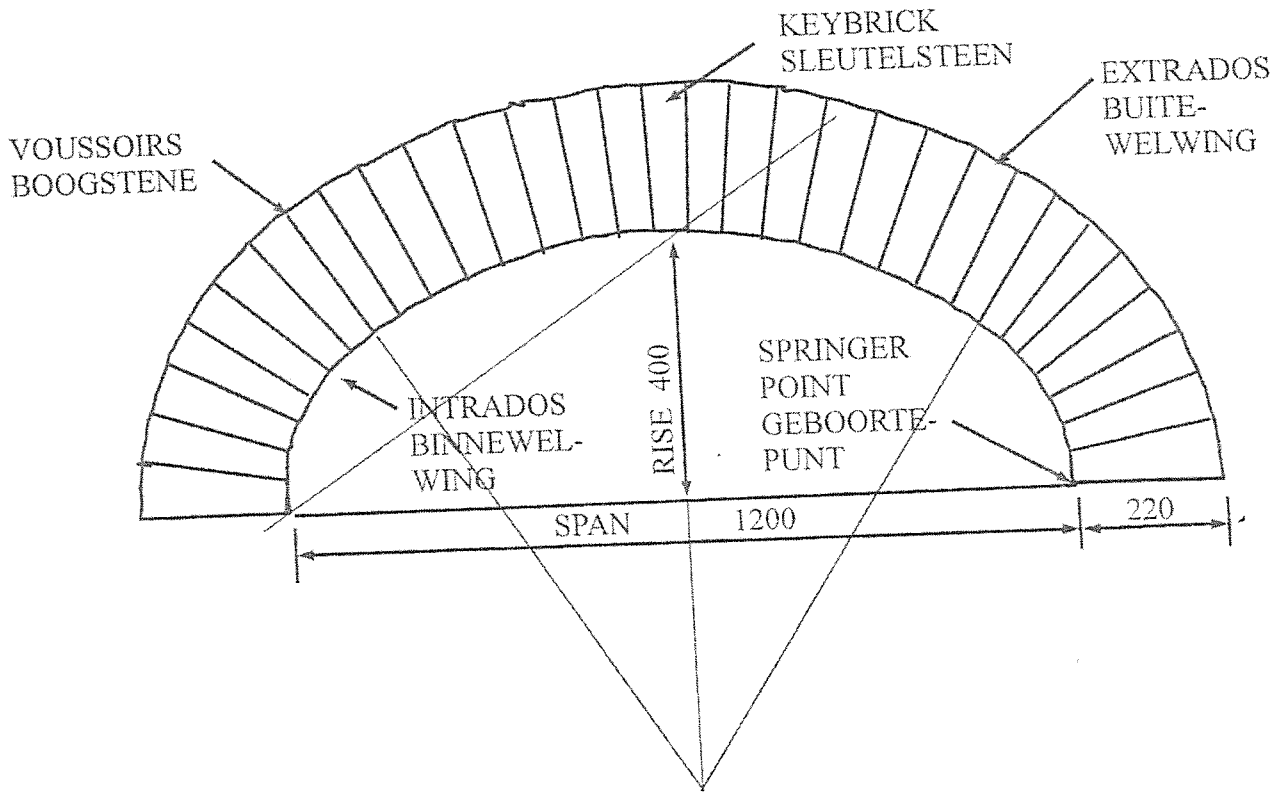

AN ELLIPTICAL GAUGED ARCH SCALE 1 : 10

[18]

Copyright reserved

QUESTION 4

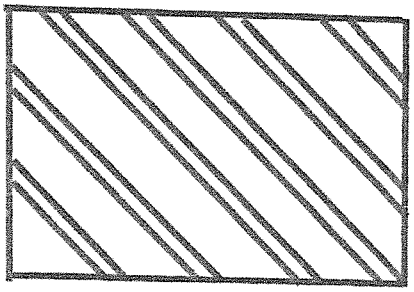

STOCK BRICK

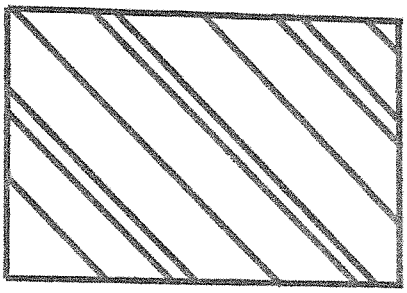

FACE BRICK

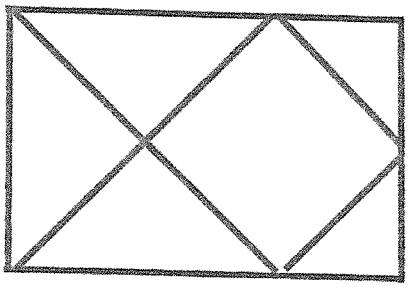

BLOCK WORK

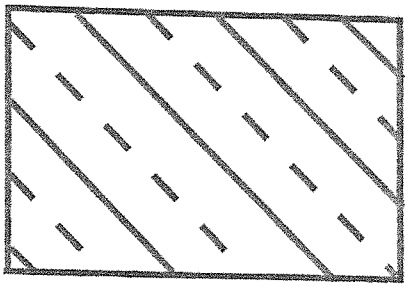

STONE WORK

THE ILLUSTRATION OF FOUR CROSS HATCHINGS

SCALE 1 : 10

[16]

Copyright reserved

QUESTION 5

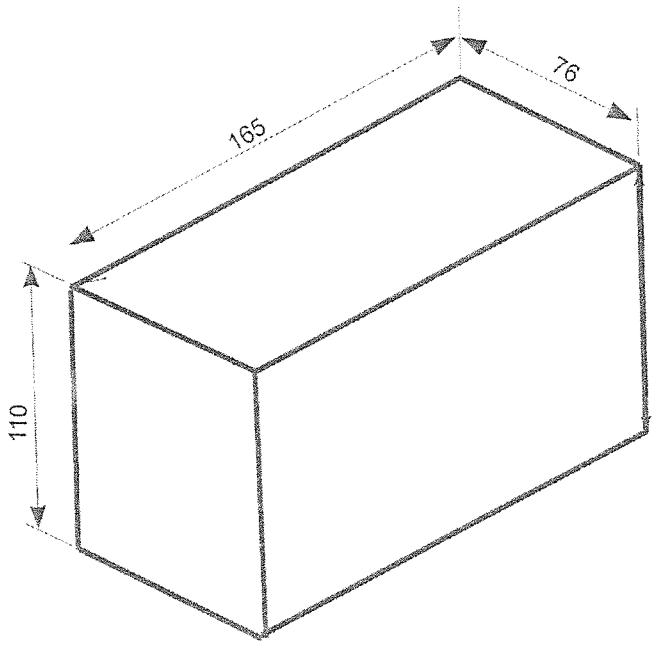

ISOMETRIC VIEW -3/4 BAT

SCALE 1 : 1

[12]

Copyright reserved

QUESTION 6

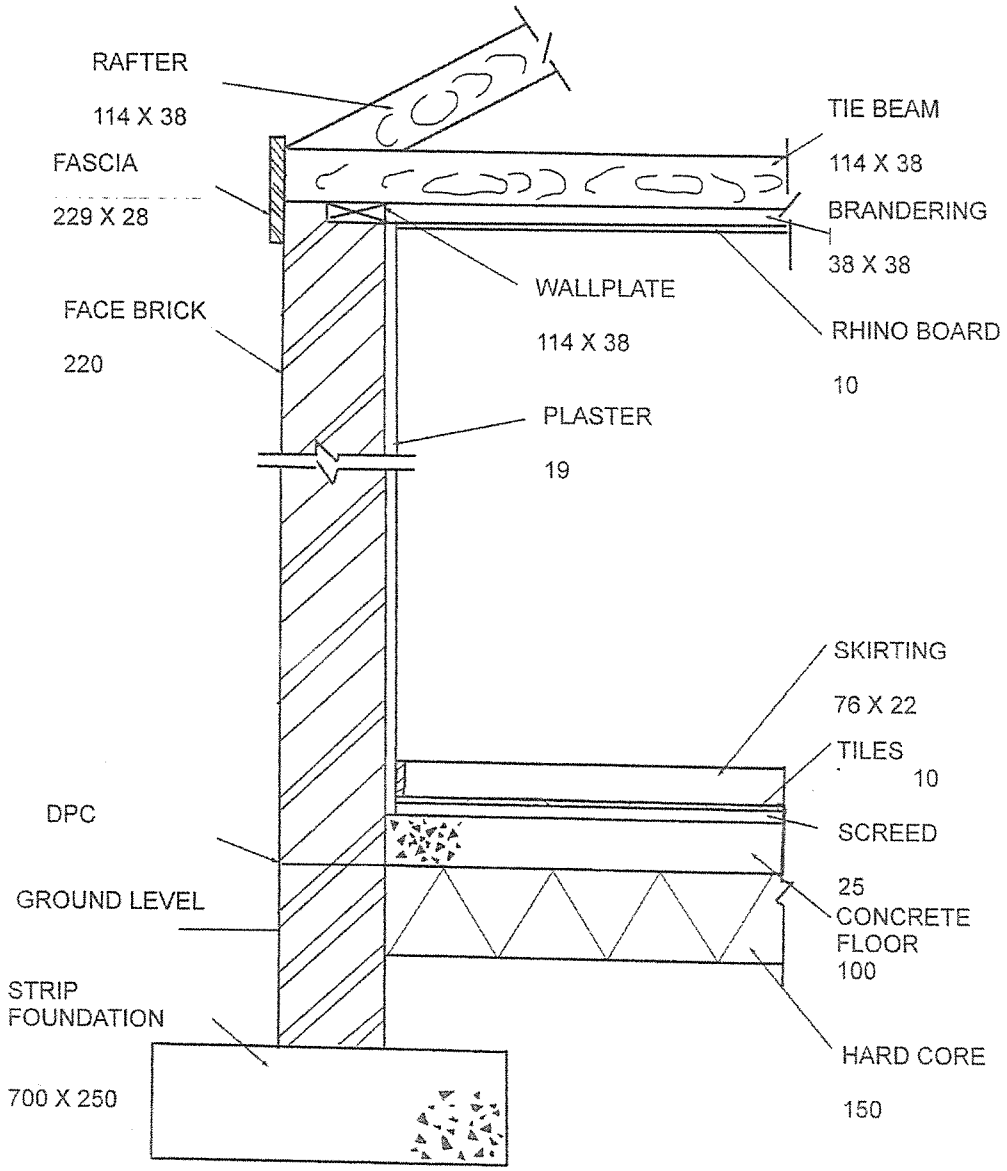

A VERTICAL CROSS SECTION THROUGH AN EXTERNAL ONE BRICK WALL

SCALE 1 : 10

Copyright reserved

PLEASE NOTE THAT IF THE CORRECTNESS IS '0'THEN NO OTHER MARKS MAY BE ADDED

QUESTION	1	143	16
Correctness	9		
Accuracy	3		
Neatness	1		
Titles, labels	1		
Dimensions and scale	1		
Setting	1		

QUESTION	2	143	8
Correctness	5		
Accuracy	1		
Neatness	0,5		
Titles, labels	0,5		
Dimensions and scale	0,5		
Setting	0,5		

QUESTION	3	143	18
Correctness	12		
Accuracy	3		
Neatness	1		
Titles, labels	1		
Dimensions and scale	1		
Setting	1		

QUESTION	4	143	16
Correctness	12		
Accuracy	2		
Neatness	0,5		
Titles, labels	0,5		
Dimensions and scale	0,5		
Setting	0,5		

QUESTION	5	143	12
Correctness	9		
Accuracy	1		
Neatness	0,5		
Titles, labels	0,5		
Dimensions and scale	0,5		
Setting	0,5		

Copyright reserved

QUESTION	6	143	30
Correctness	16		
Accuracy	6		
Neatness	2		
Titles, labels	2		
Dimensions and scale	2		
Setting	2		

Copyright reserved