201311T041

higher education & training

Department:
Higher Education and Training
REPUBLIC OF SOUTH AFRICA

T210(E)(N19)T

NOVEMBER EXAMINATION

NATIONAL CERTIFICATE

BUILDING DRAWING N1

(8090001)

19 November 2013 (X-Paper)
09:00–12:00

This question paper consists of 5 pages and 1 diagram sheet.

ENGINEERING

Copyright reserved

DEPARTMENT OF HIGHER EDUCATION AND TRAINING
REPUBLIC OF SOUTH AFRICA

NATIONAL CERTIFICATE
BUILDING DRAWING N1
TIME: 3 HOURS
MARKS: 100

INSTRUCTIONS AND INFORMATION

1. Answer ALL the questions.
2. Read ALL the questions carefully.
3. Number the answers according to the numbering system used in this question paper.
4. ALL drawings must be fully dimensioned and labelled.
5. ALL the drawings must be in accordance with the National Building Regulations and the SABS Practice for Building Drawing.
6. Fold the sheets to A4 when completed.
7. Write neatly and legibly.

ENGINEERING

Copyright reserved

QUESTION 1

Draw an isometric view of a three-quarter bat. Any hidden details may not be show.

NOTE: Your preferred view may be illustrated

SCALE 1 : 2 **[8]**

QUESTION 2

Draw FOUR rectangles of 75 mm x 50 mm. Show the following hatching symbols and space the rectangles evenly:

2.1 Stock brick

2.2 Face brick

2.3 Block work

2.4 Stone work

(4 × 4) **[16]**

SCALE 1 : 1

QUESTION 3

Draw the orthographic views of the isometric drawing in FIGURE 1, DIAGRAM SHEET 1 (attached).

SCALE 1 : 1 **[8]**

QUESTION 4

4.1 Draw the front elevation of a one-brick wall in stretcher bond, six courses high. The bottom layer must be seven bricks long.

Show a stopped end on the left side and a raking back on the right side.

SCALE 1 : 10 (6)

4.2 Draw the front elevation of a one-brick wall in English bond, six courses high. The bottom layer must be seven bricks long.

Show a stopped end on the left side and raking back on the right side

SCALE 1 : 10 (6)
[12]

ENGINEERING

QUESTION 5

5.1 Draw the front elevation of a standard two-panelled wooden door with a middle-lock rail. The overall dimensions of the door are as follows:

- 2032 mm x 813 mm.

More specification are as follows:

- Stile :100 x 44
- Top rail :200 x 44
- Middle rail :200 x 44
- Bottom rail :200 x 44
- Beading :15 x 15

SCALE 1 : 10 (18)

5.2 Refer to QUESTION 5.1 and draw a horizontal cross section through one of the stiles and part of the panel.

The following must be show:

- Stile :100 x 44
- Beading :15 x 15
- Panel :15 mm

SCALE 1 : 2 (12)
[30]

QUESTION 6

Draw a horizontal cross-section of a wooden window frame built within a one-brick wall plastered on the inside only. The window frame does not have a casement.

Use the following specifications:

- Side rail : 80 mm x 40 mm
- Beading : 20 mm x 20 mm
- Glass : 3 mm

The overall size of the window frame is:

- 650 mm (width) x 550 mm (height)

SCALE 1 : 5 **[14]**

ENGINEERING

Copyright reserved

QUESTION 7

Draw an elliptical gauged arch. The span is 1 200 mm and the rise is 400 mm.

SCALE 1 : 10

NOTE: Show the keybrick. **[12]**

TOTAL: 100

ENGINEERING

Copyright reserved

DIAGRAM SHEET 1

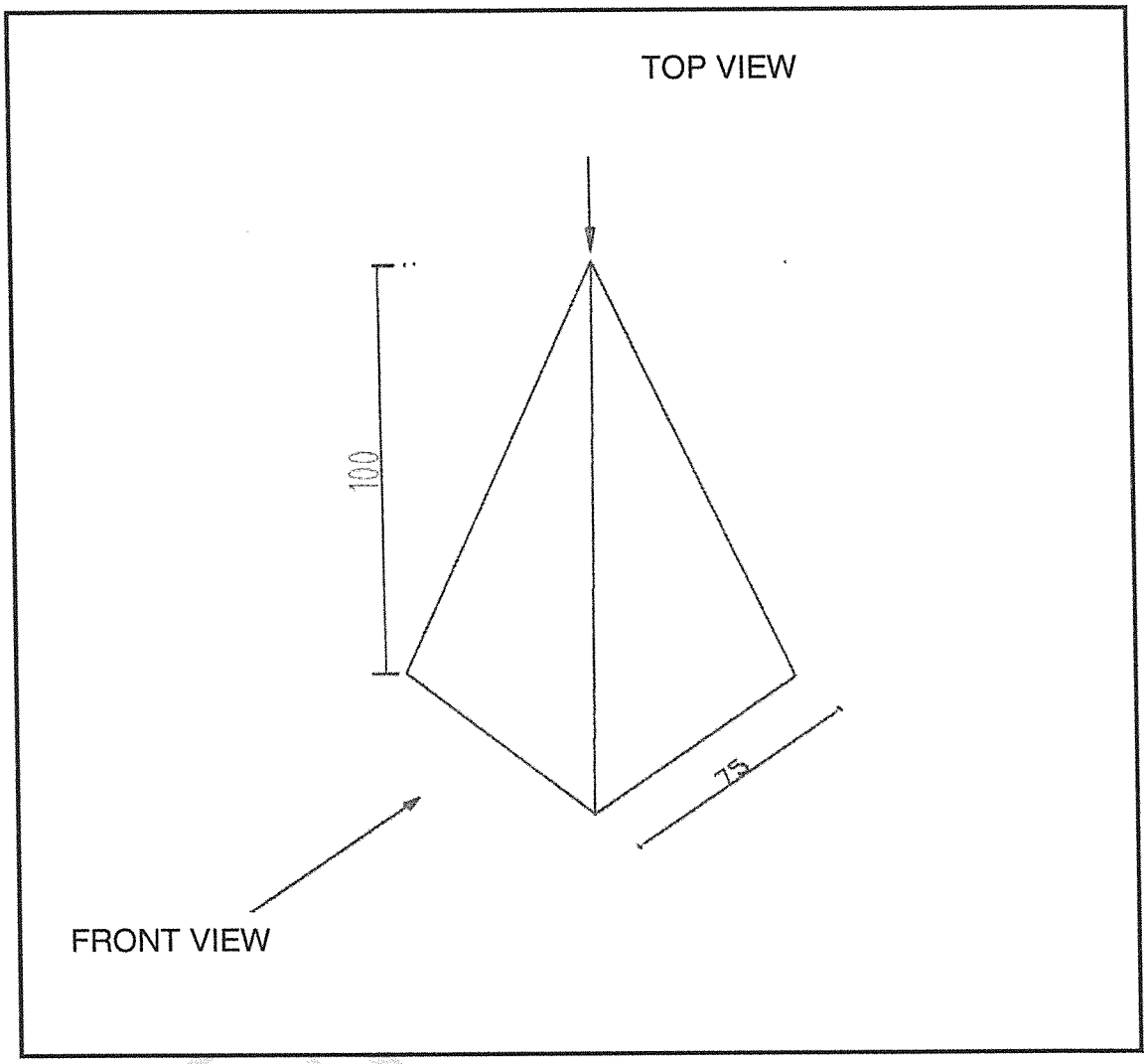

FIGURE 1

ENGLISH

Copyright reserved

higher education & training

Department:
Higher Education and Training
REPUBLIC OF SOUTH AFRICA

MARKING GUIDELINE

NATIONAL CERTIFICATE

NOVEMBER EXAMINATION

BUILDING DRAWING N1

19 NOVEMBER 2013

This marking guideline consists of 10 pages.

Copyright reserved

QUESTION 1

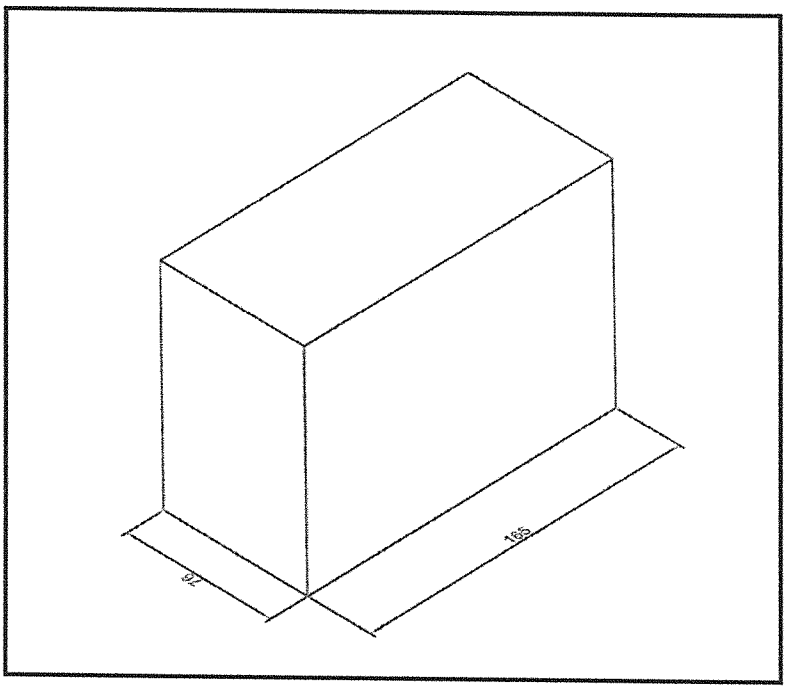

ISOMETRIC VIEW - $\frac{3}{4}$ BAT SCALE

ISOMETRIESE AANSIG - $\frac{3}{4}$ PASSTEEN

[8]

Copyright reserved

QUESTION 2

2.1

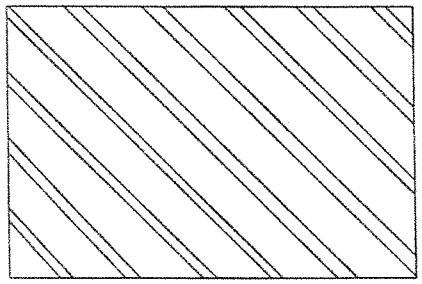

(4)

2.2

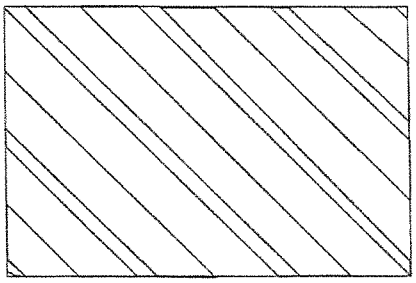

(4)

2.3

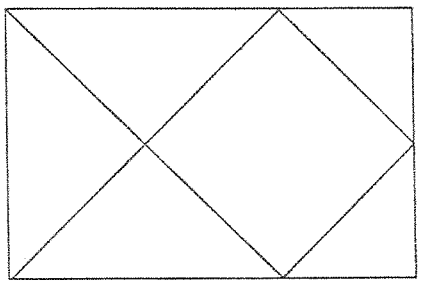

(4)

2.4

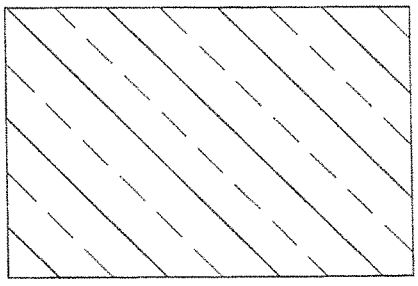

Scale 1:1

(4)
[16]

Copyright reserved

QUESTION 3

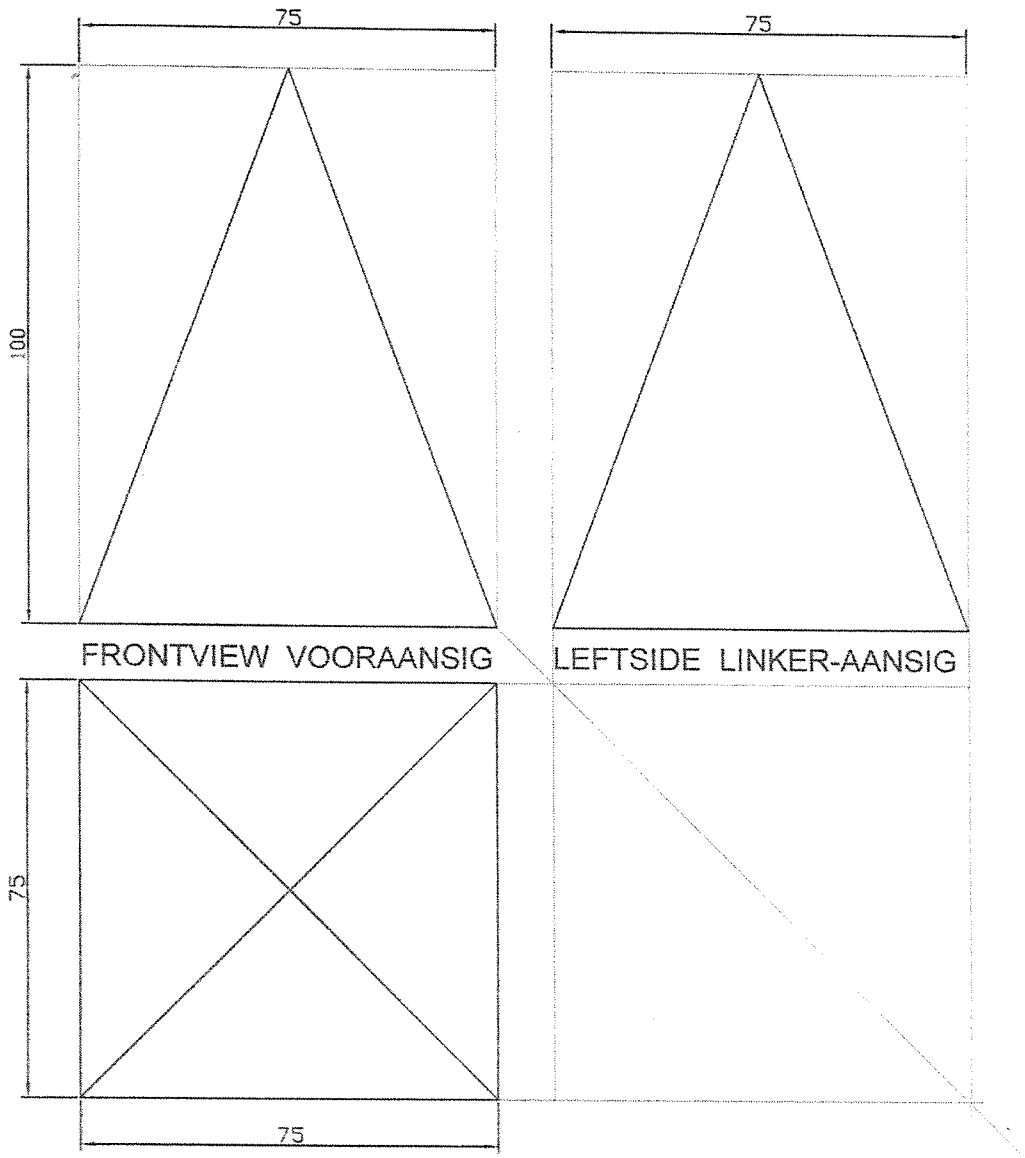

ORTHOGRAPHIC VIEW OF A PIRAMID SCALE 1 : 1

ORTOGRAFIESE AANSIG VAN 'n PIRAMIDE SKAAL 1 : 1

[8]

Copyright reserved

QUESTION 4

4.1

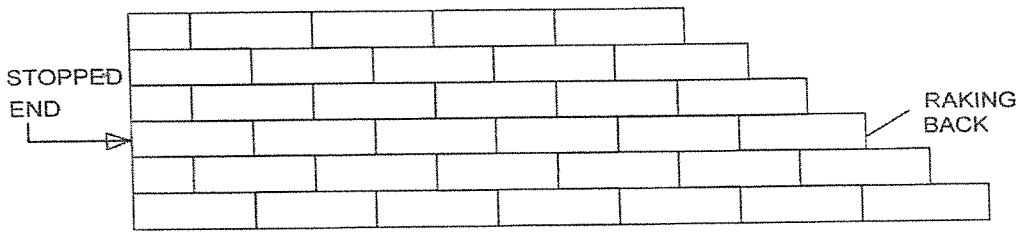

THE FRONT ELEVATION OF A WALL BUILT IN STRETHER BOND SCALE 1 : 10

DIE VOORAANSIG VAN 'n MUUR GEBOU IN STRYKVERBAND SKAAL 1 : 10 (6)

4.2

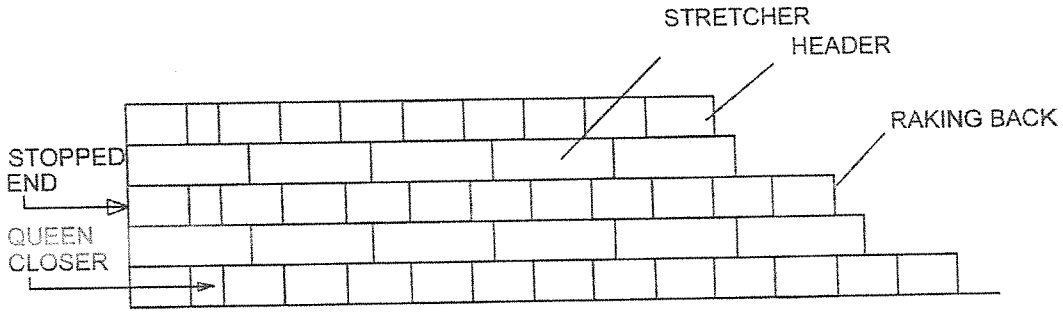

THE FRONT ELEVATION OF A WALL BUILT IN ENGLISH BOND SCALE 1 : 10

DIE VOORAANSIG VAN ' n MUUR GEBOU IN ENGELSEVERBAND SKAAL 1 : 10

(6)
[12]

QUESTION 5

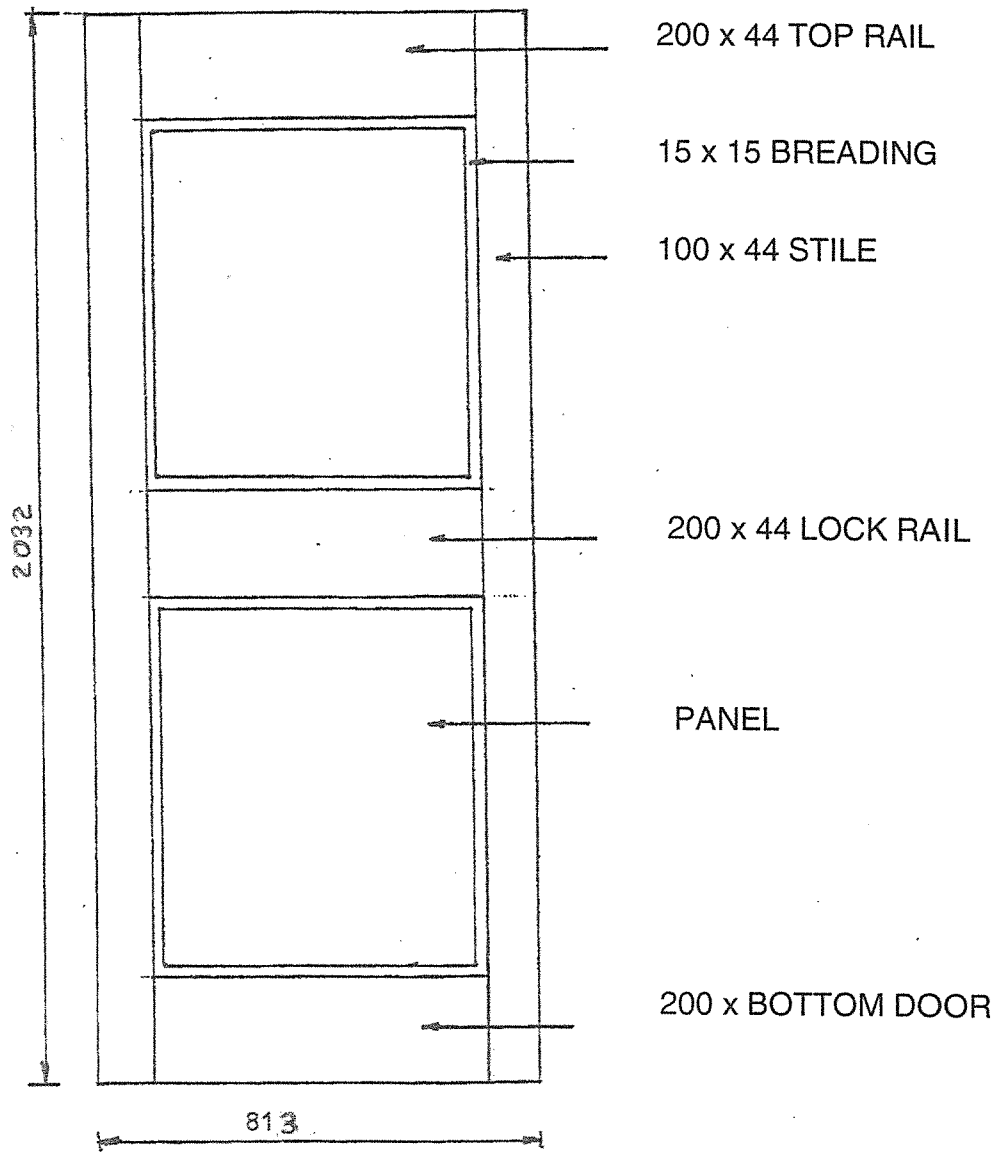

FRONT VIEW OF A TWO PANEL INTERNAL DOOR
SCALE: 1 : 10

(18)

Copyright reserved

5.2

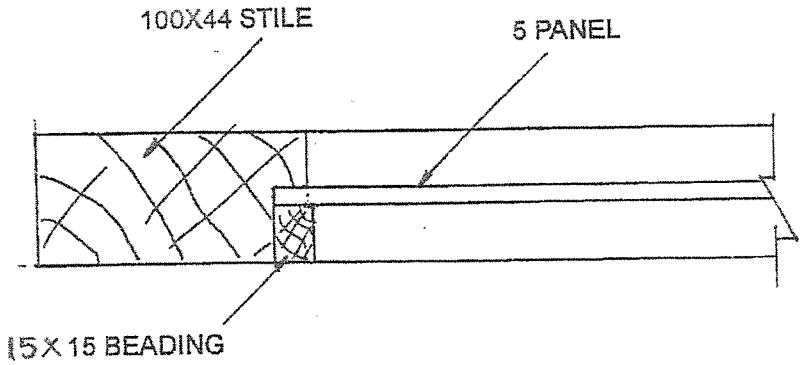

THE HORIZONTAL CROSS SECTION OF
A TWO PANEL INTERNAL DOOR (STILE ONLY)
SCALE: 1:2

(12)
[30]

Copyright reserved

QUESTION 6

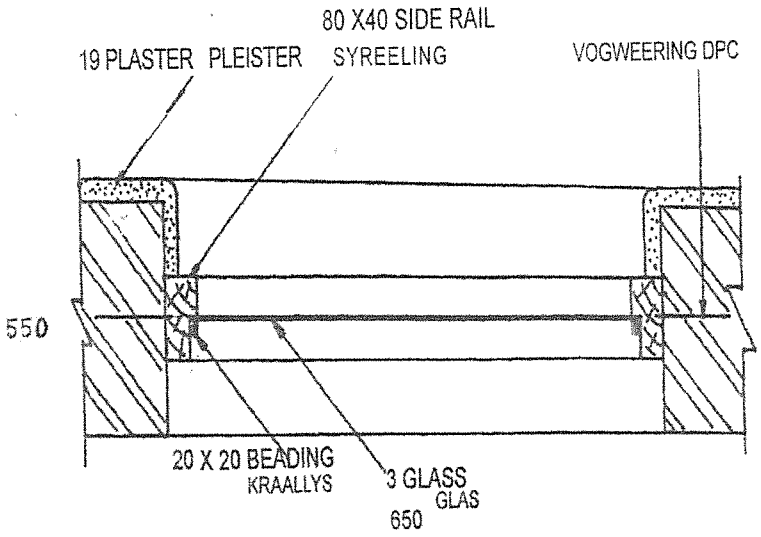

HORIZONTAL CROSS SECTION
THROUGH A WOODEN WINDOW
WITHOUT CASEMENTS
SCALE: 1:5

DWARSDEURSNIT VAN 'n
HOUTVENSTER SONDER SWAAIRAAM
SKAAL: 1:5

[14]

Copyright reserved

QUESTION 7

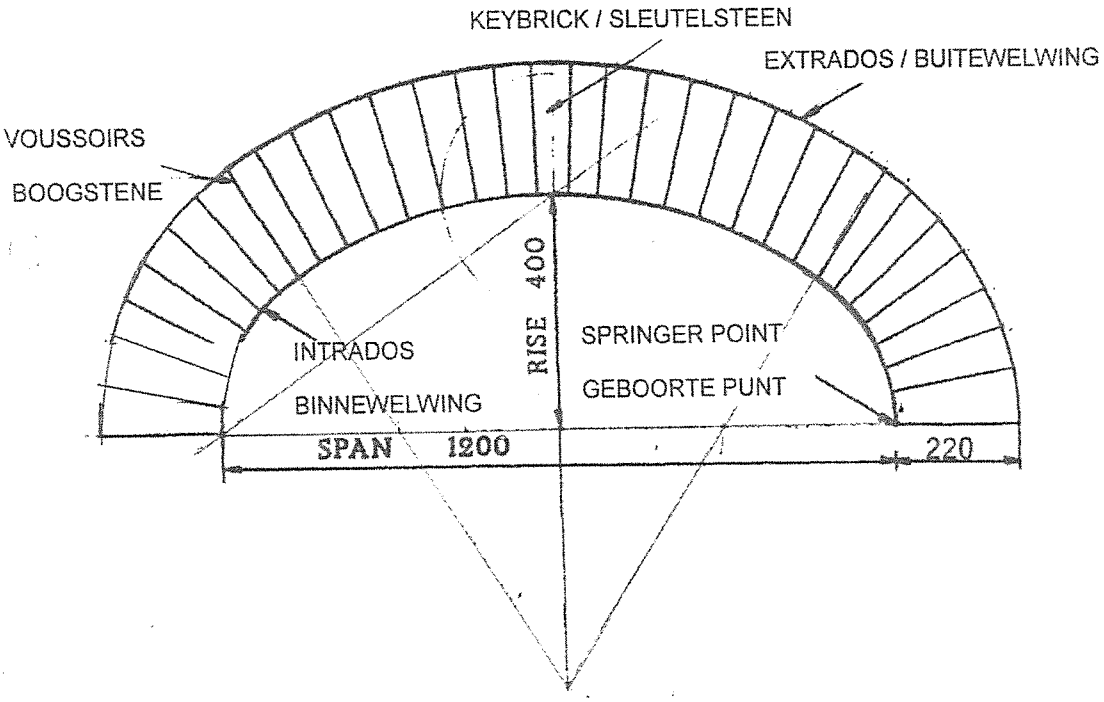

AN ELLIPTICAL GAUGED ARCH

SCALE: 1:10

ELLIPTIESE PASBOOG

SKAAL: 1:10

[12]

TOTAL: 100

Copyright reserved

PLEASE NOTE THAT IF THE CORRECTNESS IS "0" THEN NO OTHER MARKS MAY BE ADDED
LET WEL DAT AS DIE KORREKTHEID "0" IS MAG GEEN ANDER PUNTE BYGETEL WORD NIE 100

Question/Vraag	1	Nov	8
correctness/korrektheid	5.5		
accuracy/akkuraatheid	0.5		
neatness/netheid	0.5		
titles;labels/hoofopskrifte;byskrifte	0.5		
dims&scale/afmetings&skaal	0.5		
setting out/uiteensit	0.5		

Question/Vraag	5.1	Nov	18
correctness/korrektheid	13		
accuracy/akkuraatheid	1		
neatness/netheid	1		
titles;labels/hoofopskrifte;byskrifte	1		
dim&scale/afmetings&skaal	1		
setting out/uiteensit	1		

Question/Vraag	2	Nov	16
correctness/korrektheid	13.5		
accuracy/akkuraatheid	0.5		
neatness/netheid	0.5		
titles;labels/hoofopskrifte;byskrifte	0.5		
dims&scale/afmetings&skaal	0.5		
setting out/uiteensit	0.5		

Question/Vraag	5.2	Nov	12
correctness/korrektheid	9.5		
accuracy/akkuraatheid	0.5		
neatness/netheid	0.5		
titles;labels/hoofopskrifte;byskrifte	0.5		
dim&scale/afmetings&skaal	0.5		
setting out/uiteensit	0.5		

Question/Vraag	3	Nov	8
correctness/korrektheid	5.5		
accuracy/akkuraatheid	0.5		
neatness/netheid	0.5		
titles;labels/hoofopskrifte;byskrifte	0.5		
dims&scale/afmetings&skaal	0.5		
setting out/uiteensit	0.5		

Question/Vraag	6	Nov	14
correctness/korrektheid	9		
accuracy/akkuraatheid	1		
neatness/netheid	1		
titles;labels/hoofopskrifte;byskrifte	1		
dim&scale/afmetings&skaal	1		
setting out/uiteensit	1		

Question/Vraag	4.1	Nov	6
correctness/korrektheid	3.5		
accuracy/akkuraatheid	0.5		
neatness/netheid	0.5		
titles;labels/hoofopskrifte;byskrifte	0.5		
dims&scale/afmetings&skaal	0.5		
setting out/uiteensit	0.5		

Question/Vraag	7	NOV	12
correctness/korrektheid	7		
accuracy/akkuraatheid	1		
neatness/netheid	1		
titles;labels/hoofopskrifte;byskrifte	1		
dim&scale/afmetings&skaal	1		
setting out/uiteensit	1		

Question/Vraag	4.2	Nov	6
correctness/korrektheid	3.5		
accuracy/akkuraatheid	0.5		
neatness/netheid	0.5		
titles;labels/hoofopskrifte;byskrifte	0.5		
dims&scale/afmetings&skaal	0.5		
setting out/uiteensit	0.5		

Question/Vraag			
correctness/korrektheid			
accuracy/akkuraatheid			
neatness/netheid			
titles;labels/hoofopskrifte;byskrifte			
dim&scale/afmetings&skaal			
setting out/uiteensit			

Copyright reserved