higher education & training

Department:
Higher Education and Training
REPUBLIC OF SOUTH AFRICA

T150(E)(J31)T

AUGUST EXAMINATION

NATIONAL CERTIFICATE

BUILDING DRAWING N1

(8090001)

31 July 2014 (Y-Paper)
13:00–17:00

This question paper consists of 5 pages and 1 diagram sheet.

ENGINEERING

Copyright reserved

DEPARTMENT OF HIGHER EDUCATION AND TRAINING
REPUBLIC OF SOUTH AFRICA

NATIONAL CERTIFICATE
BUILDING DRAWING N1
TIME: 4 HOURS
MARKS: 100

INSTRUCTIONS AND INFORMATION

1. Answer ALL the questions.
2. Read ALL the questions carefully.
3. Number the answers according to the numbering system used in this question paper.
4. Write and draw neatly and legibly.

ENGINEERING

Copyright reserved

QUESTION 1

Draw an isometric view of a queen closer.

Note: Your preferred view may be illustrated.
Do NOT show any hidden details.
Scale 1 : 2

[12]

QUESTION 2

Draw FOUR rectangles 750 mm x 500 mm evenly spaced showing the following hatching symbols in the rectangles:

2.1 Glass (Section) (4)

2.2 Stock brick (4)

2.3 Earth undisturbed (4)

2.4 Face brick (4)

Note: Arrange the rectangles neatly and allow a space of 25 mm between the rectangles

Scale 1 : 10

[16]

QUESTION 3

Draw the front elevation of a one-brick wall in stretcher bond SIX courses high.
The bottom course must be SEVEN bricks long.
Show a stopped end on the left and raking back on the right side.

Scale 1 : 10

[8]

QUESTION 4

Draw the orthographic views of FIGURE on the attached DIAGRAM SHEET.

Scale 1 : 1

[12]

ENGINEERING

Copyright reserved

QUESTION 5

Draw a vertical cross section through the foundation for a one-brick wall.

Show the following details:

One-brick external wall built with face bricks.

75 mm concrete floor

Hard core that was compacted

25 mm screed

Undisturbed soil

Damp course

600 x 300 concrete foundation

Ground level

Scale 1 : 10

[20]

QUESTION 6

Draw the front elevation of a standard two-panelled solid wooden door with a middle lock rail. The overall dimensions of the door are 2 032 mm x 813 mm.

The following must be included:

Stile 100 x 44

Top rail 200 x 44

Lock rail 200 x 44

Bottom rail 200 x 44

Beading 15 x 15

Scale 1 : 10

[18]

ENGINEERING

Copyright reserved

QUESTION 7

Draw a horizontal cross section of a steel casement window and show the following details:

A portion of the adjacent brick opening.

Internal plaster.

Steel fixing lug

Steel casement style

3 mm glass

Sealing compound (putty)

Scale 1 : 1

Note : Show only ONE side of the opening. **[14]**

TOTAL: 100

ENGINEERING

Copyright reserved

DIAGRAM SHEET.

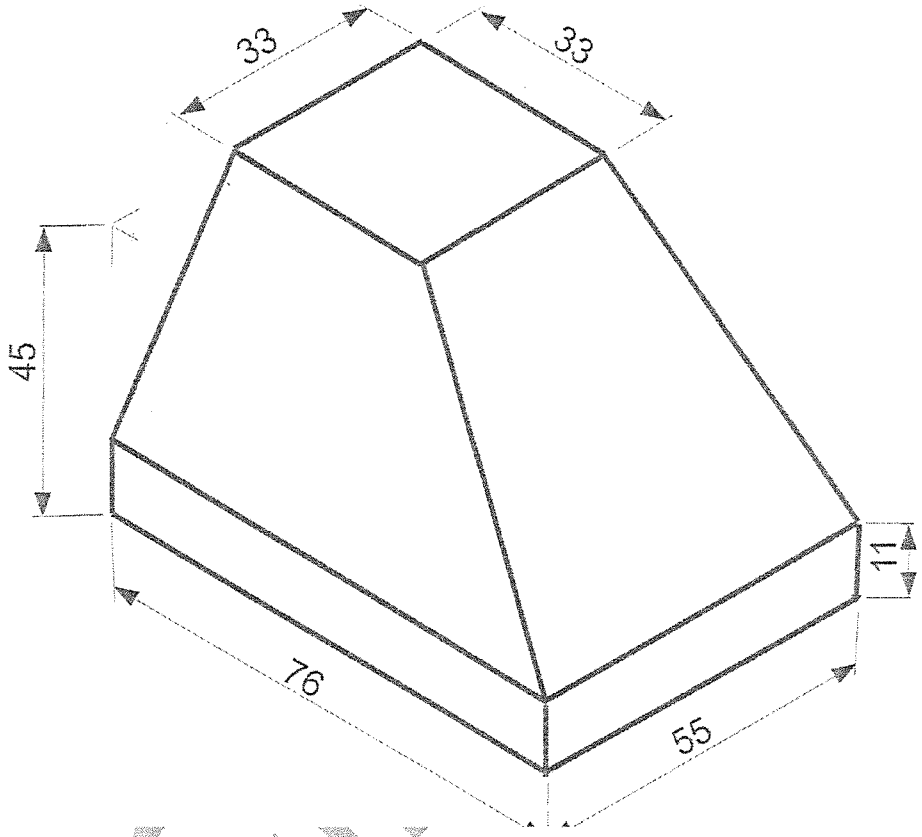

Copyright reserved

higher education & training

Department:
Higher Education and Training
REPUBLIC OF SOUTH AFRICA

MARKING GUIDELINE

NATIONAL CERTIFICATE

AUGUST EXAMINATION

BUILDING DRAWING N1

31 JULY 2014

This marking guideline consists of 8 pages.

Copyright reserved

QUESTION 1

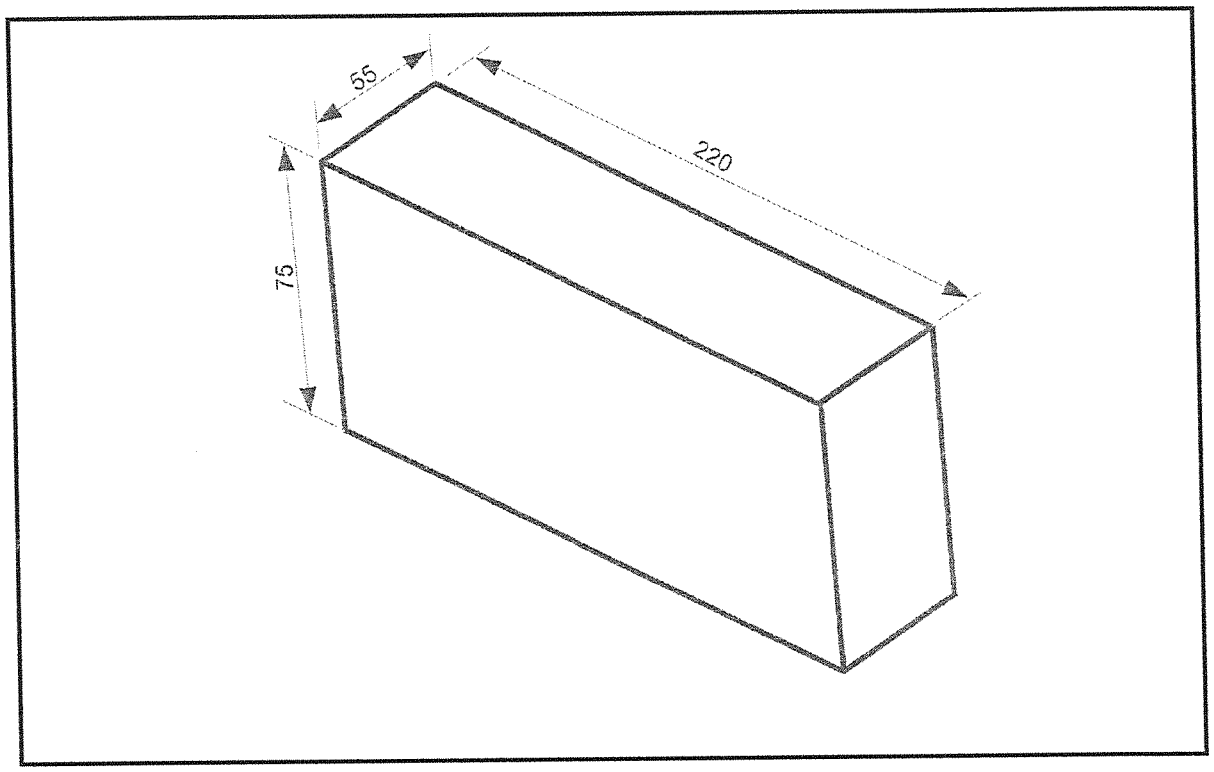

ANISOMETGRIC VIEW OF A QUEEN CLOSED SCALE 1 : 2 **[12]**

Copyright reserved

QUESTION 2

2.1

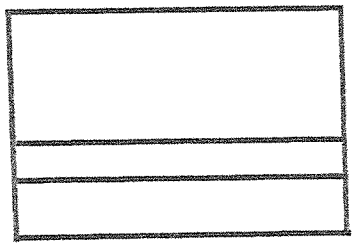

GLASS (SECTION) (4)

2.2

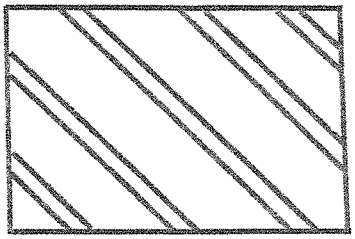

STOCK BRICKS

(4)

2.3

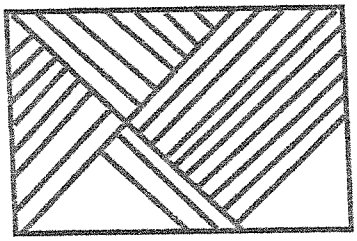

UNDISTURBED SOIL

(4)

2.4

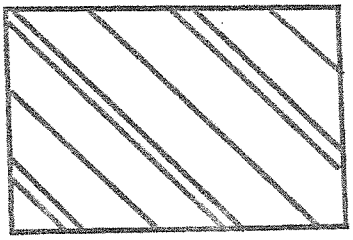

FACE BRICK

ILLUSTRATION OF FOUR HATCHES SCALE 1 : 10 (4)
[16]

Copyright reserved

QUESTION 3

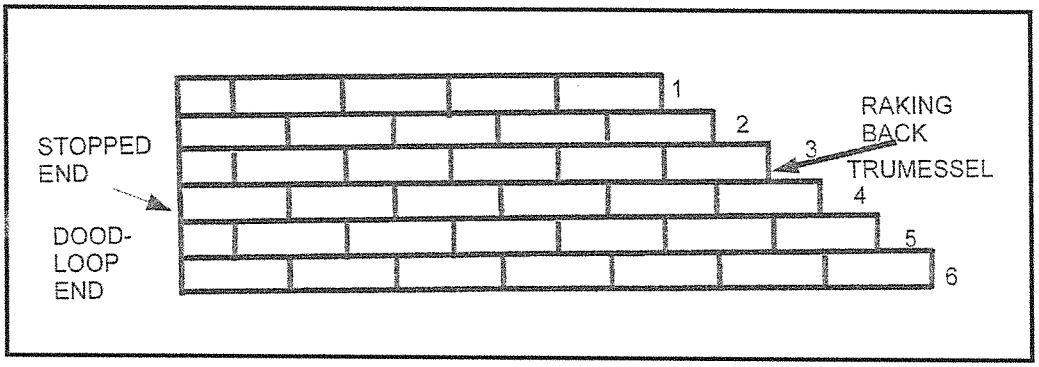

THE FRONT ELEVTION OF A WALL BUILT IN STRETCHER BOND SCALE 1 : 10 **[8]**

QUESTION 4

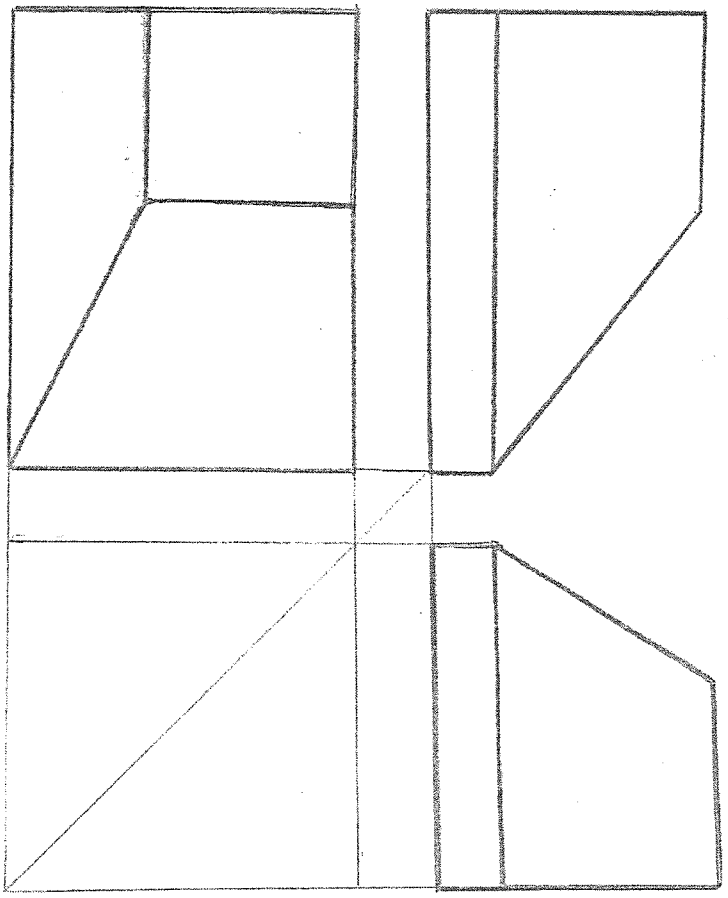

[12]

QUESTION 5

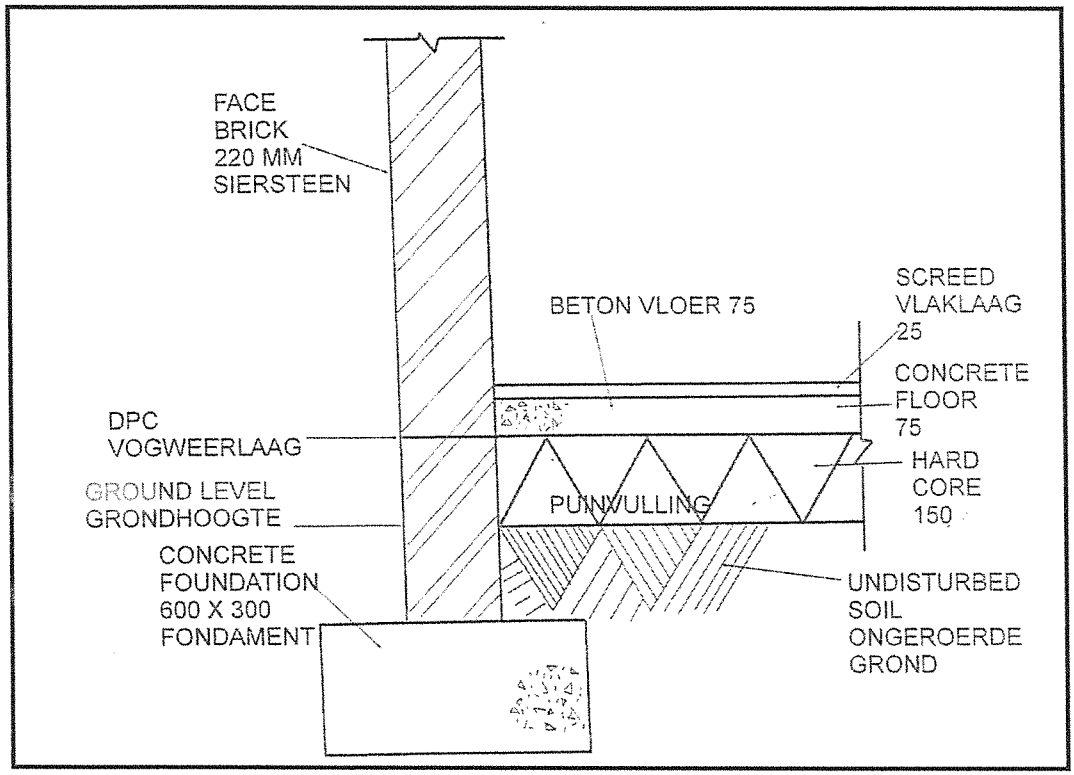

A VERTICAL CROSS SECTION THROUGH THE FOUNDATION FOR A ONE-BRICK WALL SCALE 1 : 10 **[20]**

Copyright reserved

QUESTION 6

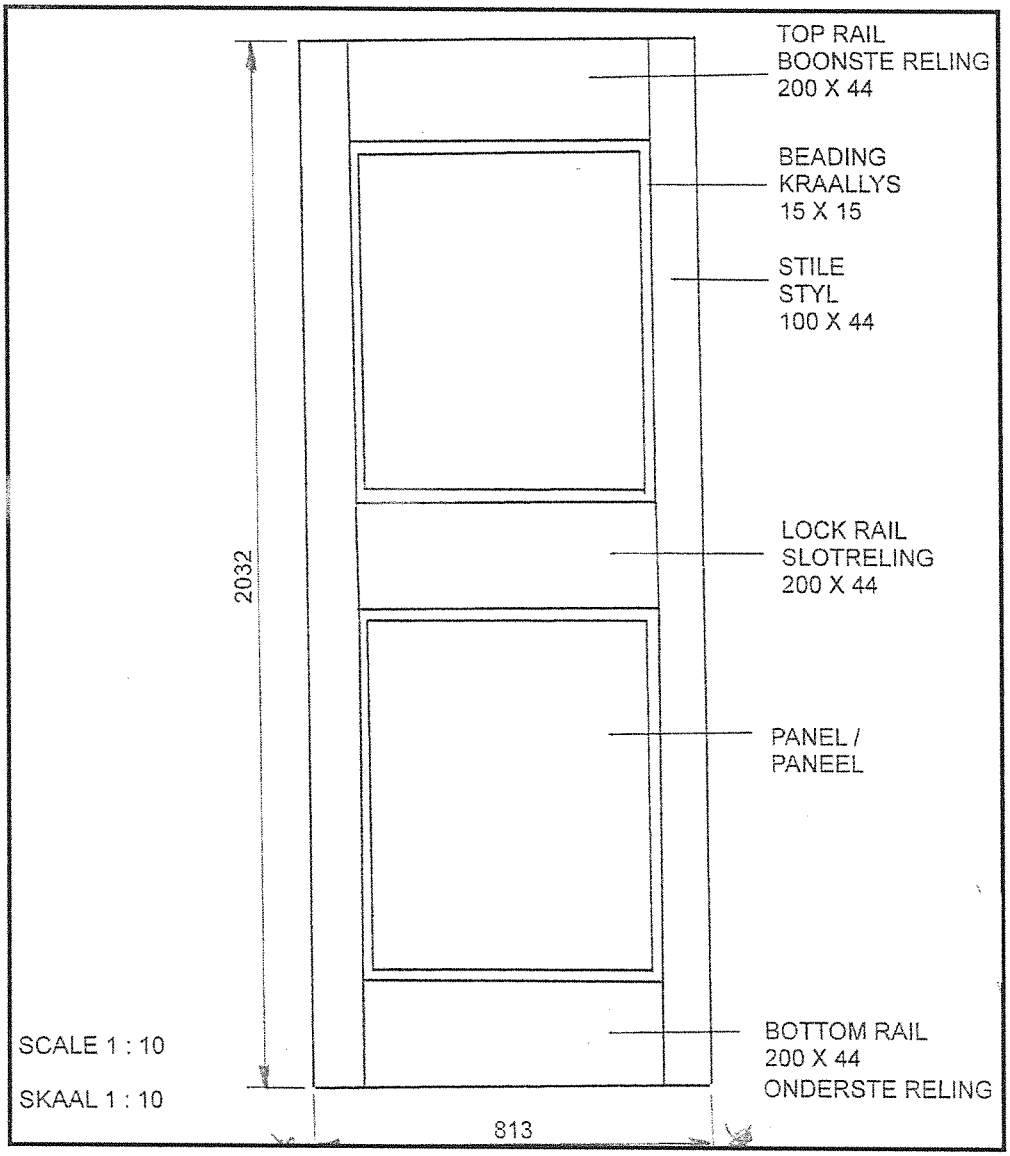

THE FRONT ELEVATION OF A TWO-PANEL SOLID WOODEN DOOR **[18]**

Copyright reserved

QUESTION 7

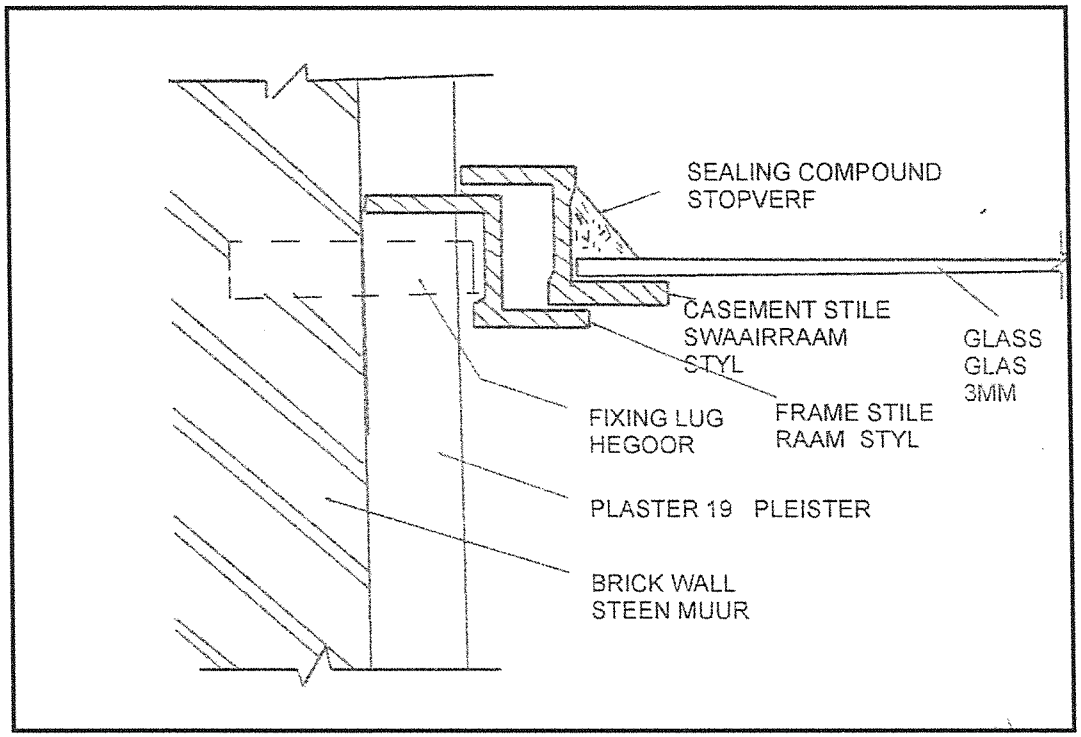

HORIZONTAL CROSS SECTION THROUGH A STEEL CASEMENT WINDOW
SCALE 1 : 1 **[14]**

TOTAL: 100

Copyright reserved

PLEASE NOTE THAT IF THE CORRECTNESS IS "0" THEN NO OTHER MARKS MAY BE ADDED
LET WEL DAT AS DIE KORREKTHEID "0" IS MAG GEEN ANDER PUNTE BYGETEL WORD NIE

100

Question/Vraag	1	142	12
correctness/korrektheid	9		
accuracy/akkuraatheid	1		
neatness/netheid	0.5		
titles;labels/hoofopskrifte;byskrifte	0.5		
dims&scale/afmetings&skaal	0.5		
setting out/uiteensit	0.5		

Question/Vraag	6	142	18
correctness/korrektheid	13		
accuracy/akkuraatheid	1		
neatness/netheid	1		
titles;labels/hoofopskrifte;byskrifte	1		
dim&scale/afmetings&skaal	1		
setting out/uiteensit	1		

Question/Vraag	2	142	16
correctness/korrektheid	12		
accuracy/akkuraatheid	2		
neatness/netheid	0.5		
titles;labels/hoofopskrifte;byskrifte	0.5		
dims&scale/afmetings&skaal	0.5		
setting out/uiteensit	0.5		

Question/Vraag	7	142	14
correctness/korrektheid	9		
accuracy/akkuraatheid	1		
neatness/netheid	1		
titles;labels/hoofopskrifte;byskrifte	1		
dim&scale/afmetings&skaal	1		
setting out/uiteensit	1		

Question/Vraag	3	142	8
correctness/korrektheid	5		
accuracy/akkuraatheid	1		
neatness/netheid	0.5		
titles;labels/hoofopskrifte;byskrifte	0.5		
dims&scale/afmetings&skaal	0.5		
setting out/uiteensit	0.5		

Question/Vraag			
correctness/korrektheid			
accuracy/akkuraatheid			
neatness/netheid			
titles;labels/hoofopskrifte;byskrifte			
dim&scale/afmetings&skaal			
setting out/uiteensit			

Question/Vraag	4	142	12
correctness/korrektheid	9		
accuracy/akkuraatheid	1		
neatness/netheid	0.5		
titles;labels/hoofopskrifte;byskrifte	0.5		
dims&scale/afmetings&skaal	0.5		
setting out/uiteensit	0.5		

Question/Vraag			
correctness/korrektheid			
accuracy/akkuraatheid			
neatness/netheid			
titles;labels/hoofopskrifte;byskrifte			
dim&scale/afmetings&skaal			
setting out/uiteensit			

Question/Vraag	5	142	20
correctness/korrektheid	14		
accuracy/akkuraatheid	2		
neatness/netheid	1		
titles;labels/hoofopskrifte;byskrifte	1		
dims&scale/afmetings&skaal	1		
setting out/uiteensit	1		

Question/Vraag			
correctness/korrektheid			
accuracy/akkuraatheid			
neatness/netheid			
titles;labels/hoofopskrifte;byskrifte			
dim&scale/afmetings&skaal			
setting out/uiteensit			

Copyright reserved