higher education & training

Department:
Higher Education and Training
REPUBLIC OF SOUTH AFRICA

MARKING GUIDELINE

NATIONAL CERTIFICATE

BUILDING DRAWING N1

30 July 2021

This marking guideline consists of 12 pages.

Copyright reserved

QUESTION 1

1.1

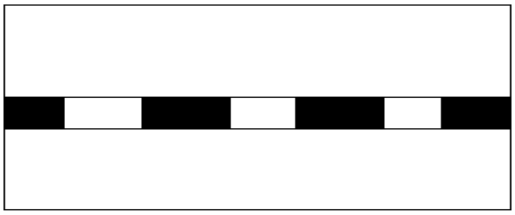

SHEET MEMBRANE

1.2

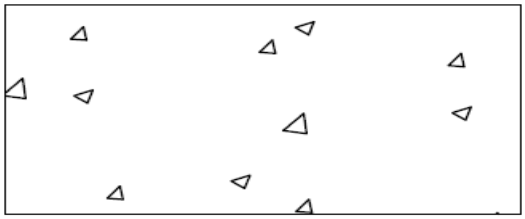

CONCRETE

1.3

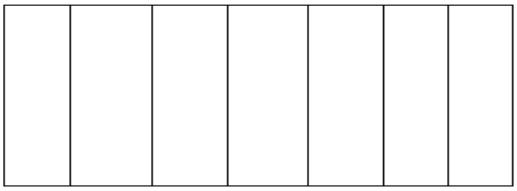

FIBRE BOARD

1.4

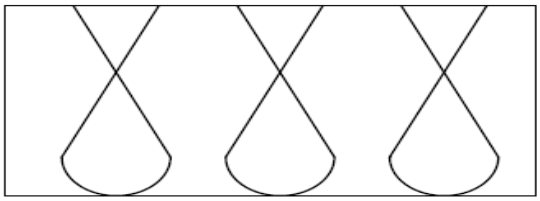

INSULATION

(4 × 4) **[16]**

RUBRIC: QUESTION 1				
MARKING CRITERIA	**POSSIBLE MARK**	**MARKER**	**INTERNAL MODERATOR**	**EXTERNAL MODERATOR**
Sheet membrane	4			
Concrete	4			
Fibre board	4			
Insulation	4			
TOTAL	**16**			

NOTE: Do not allocate any marks for any part drawn in an incorrect position, except marks for hatching of that component where applicable.

QUESTION 2

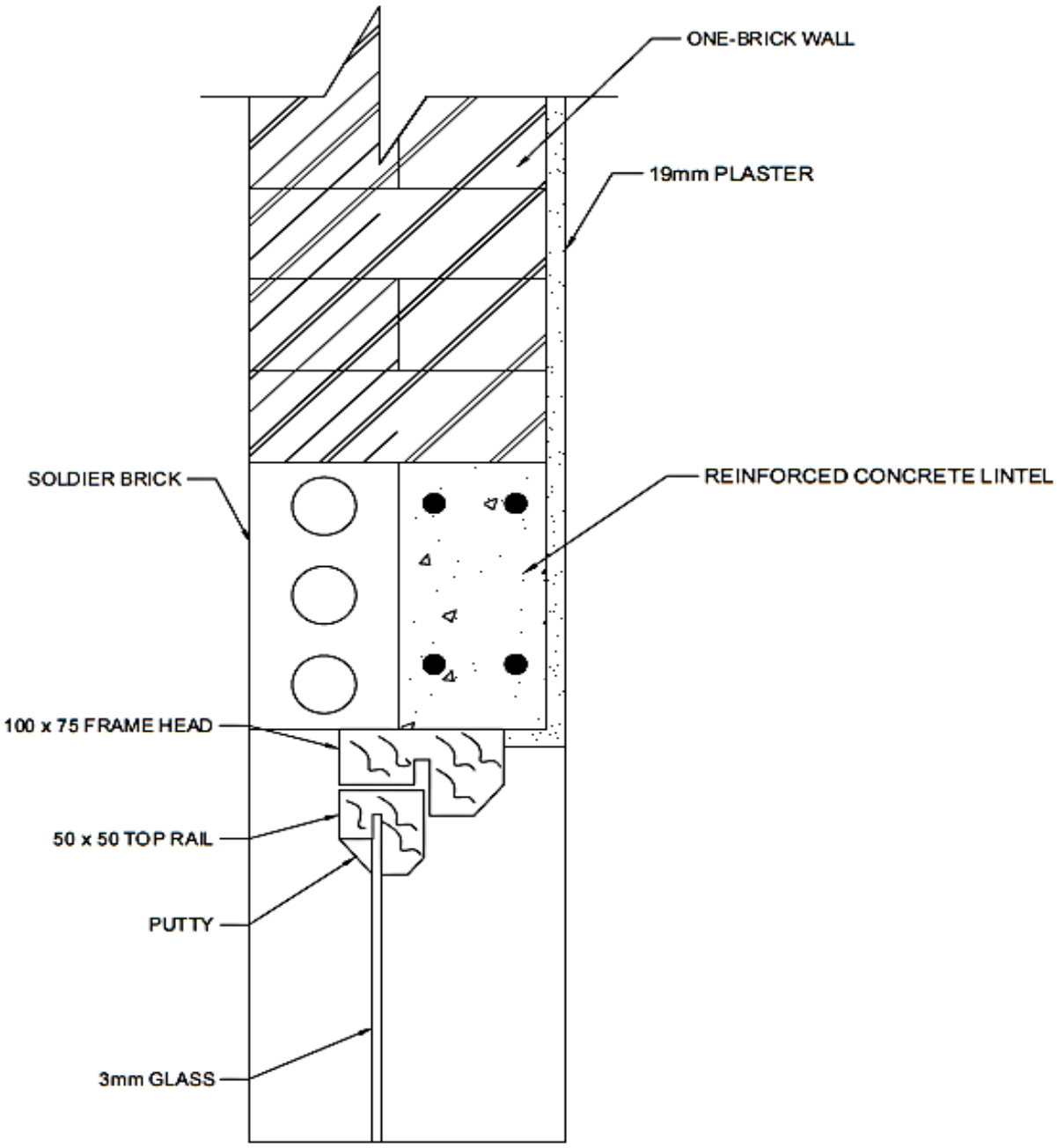

VERTICAL SECTION THROUGH WINDOW OPENING
SCALE 1:5 **[20]**

RUBRIC: QUESTION 2					
PART OF DRAWING	**MARKING CRITERIA**	**POSSIBLE MARK**	**MARKER**	**INTERNAL MODERATOR**	**EXTERNAL MODERATOR**
Soldier brick, reinforced lintel, wall, plaster	Correct position	4			
	Correct size	4			
	Hatching	4			
	Labels	4			
Frame head, top rail, putty, glass	Correct position	4			
	Correct size	3			
	Hatching	2 frame head & top rails			
	Labels	4			
Subtotal		29			
Divide by		**2,63**			
Overall correctness		**11**			
Line work		**3**			
Accuracy		**2**			
Balanced layout and neatness		**2**			
Title & scale		**2**			
Total		**20**			

NOTE: Do not allocate any marks for any part drawn in an incorrect position, except marks for hatching of that component where applicable.

Copyright reserved

QUESTION 3

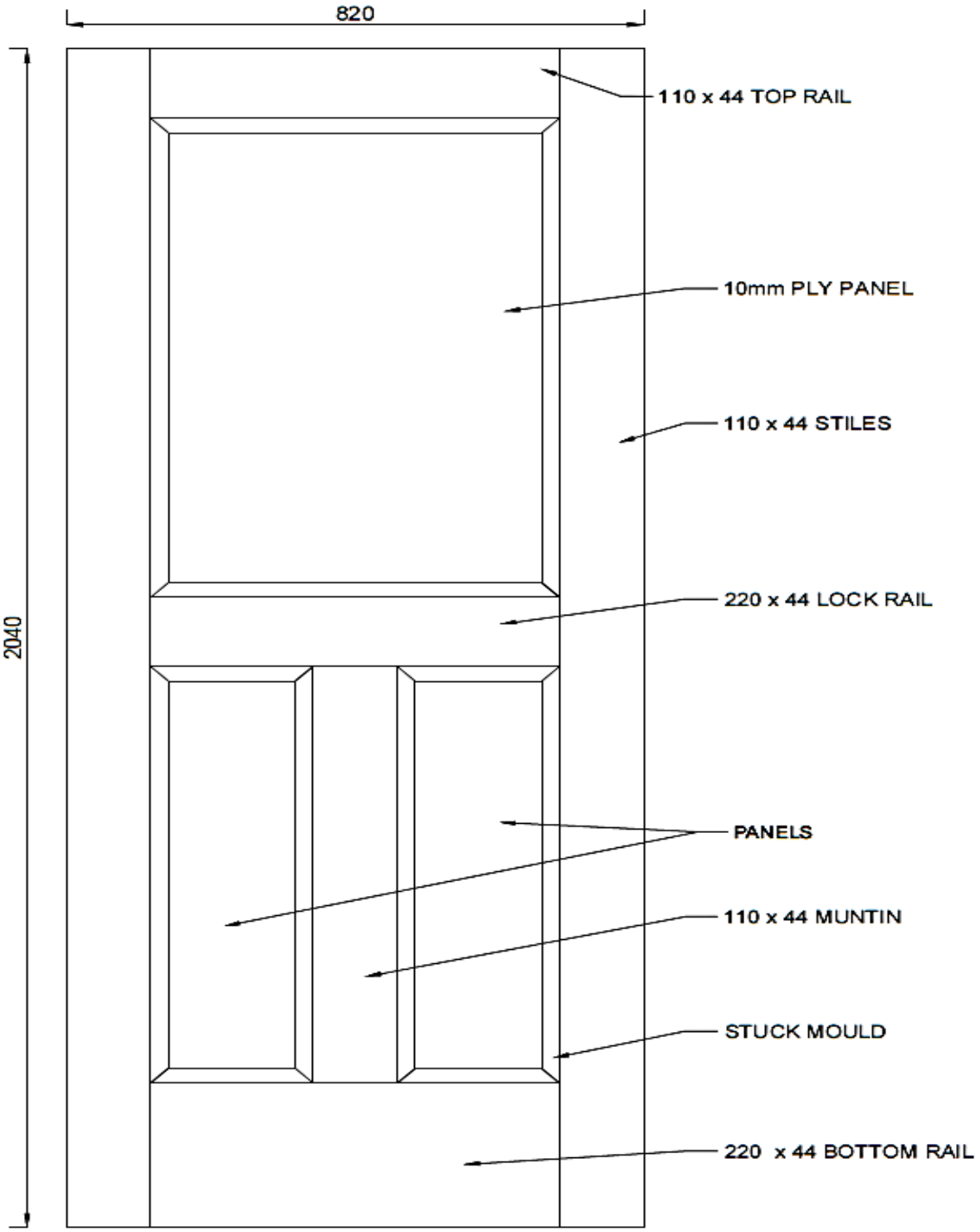

THE FRONT ELEVATION OF A THREE-PANEL DOOR
SCALE 1:10 **[20]**

Copyright reserved

RUBRIC: QUESTION 3					
PART OF DRAWING	**MARKING CRITERIA**	**POSSIBLE MARK**	**MARKER**	**INTERNAL MODERATOR**	**EXTERNAL MODERATOR**
Stiles, top rail, bottom rail, lock rail	Correct position	5			
	Correct size	5			
	Labels	4			
Three panels, muntin, stuck mould	Correct position	6			
	Correct size	4			
	Labels	3			
	Dimensions	2			
Subtotal		29			
Divide by		**2,41**			
Overall correctness		**12**			
Line work		**2**			
Accuracy		**2**			
Balanced layout and neatness		**2**			
Title & scale		**2**			
TOTAL		**20**			

NOTE: Do not allocate any marks for any part drawn in an incorrect position, except marks for hatching of that component where applicable

Copyright reserved

QUESTION 4

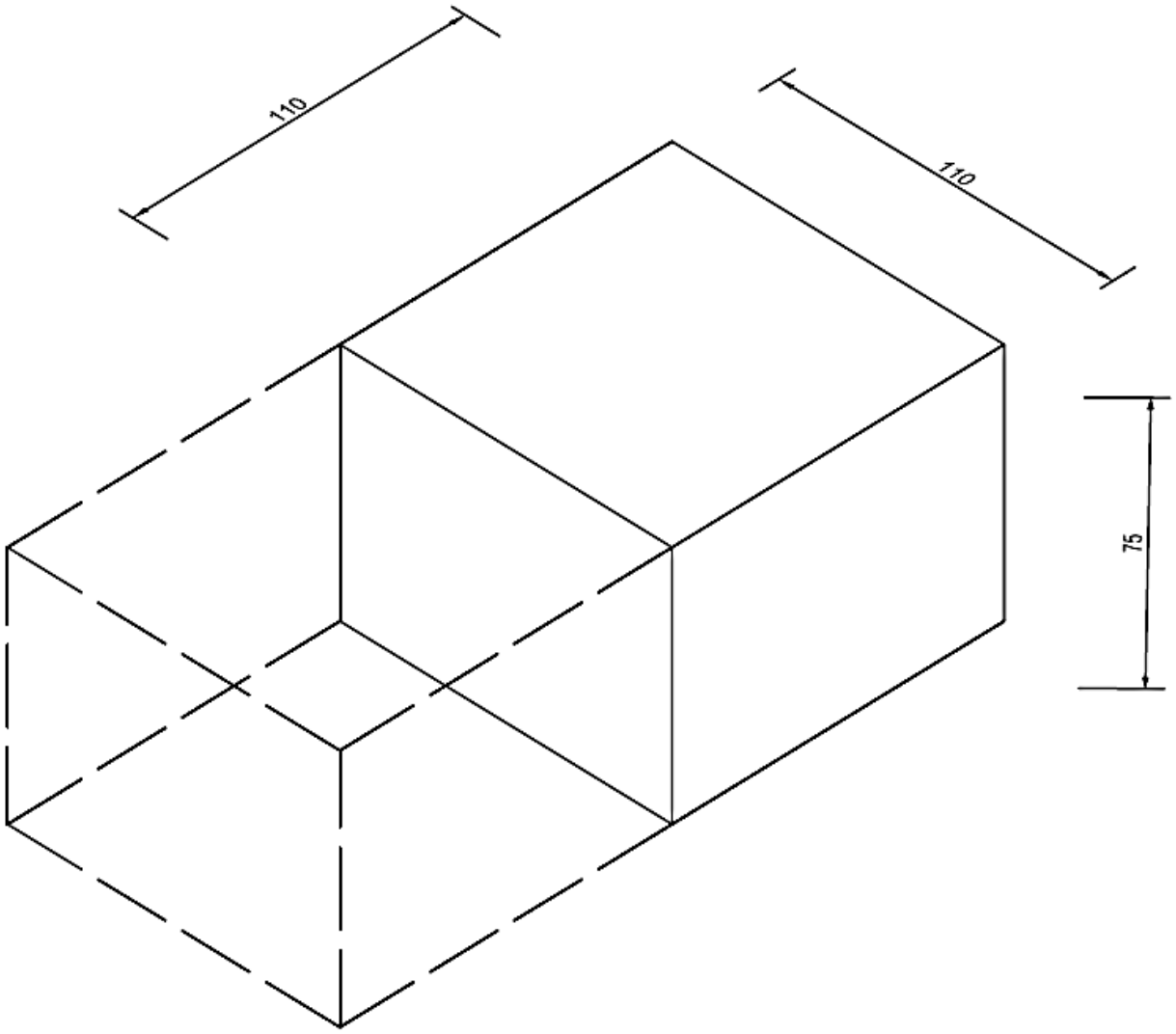

THE ISOMETRIC VIEW OF A HALF-BAT BRICK
SCALE 1:2 **[10]**

RUBRIC: QUESTION 4				
MARKING CRITERIA	**POSSIBLE MARK**	**MARKER**	**INTERNAL MODERATOR**	**EXTERNAL MODERATOR**
Axis	1			
Correctness	3			
Correct size	4			
Dimensions	3			
Hidden details	4			
Subtotal	**15**			
Divide by	**2,5**			
Overall correctness	**6**			
Line work	**1**			
Balanced layout and neatness	**1**			
Title & scale	**2**			
TOTAL	**10**			

NOTE: Do not allocate any marks for any part drawn in an incorrect position, except marks for hatching of that component where applicable

Copyright reserved

QUESTION 5

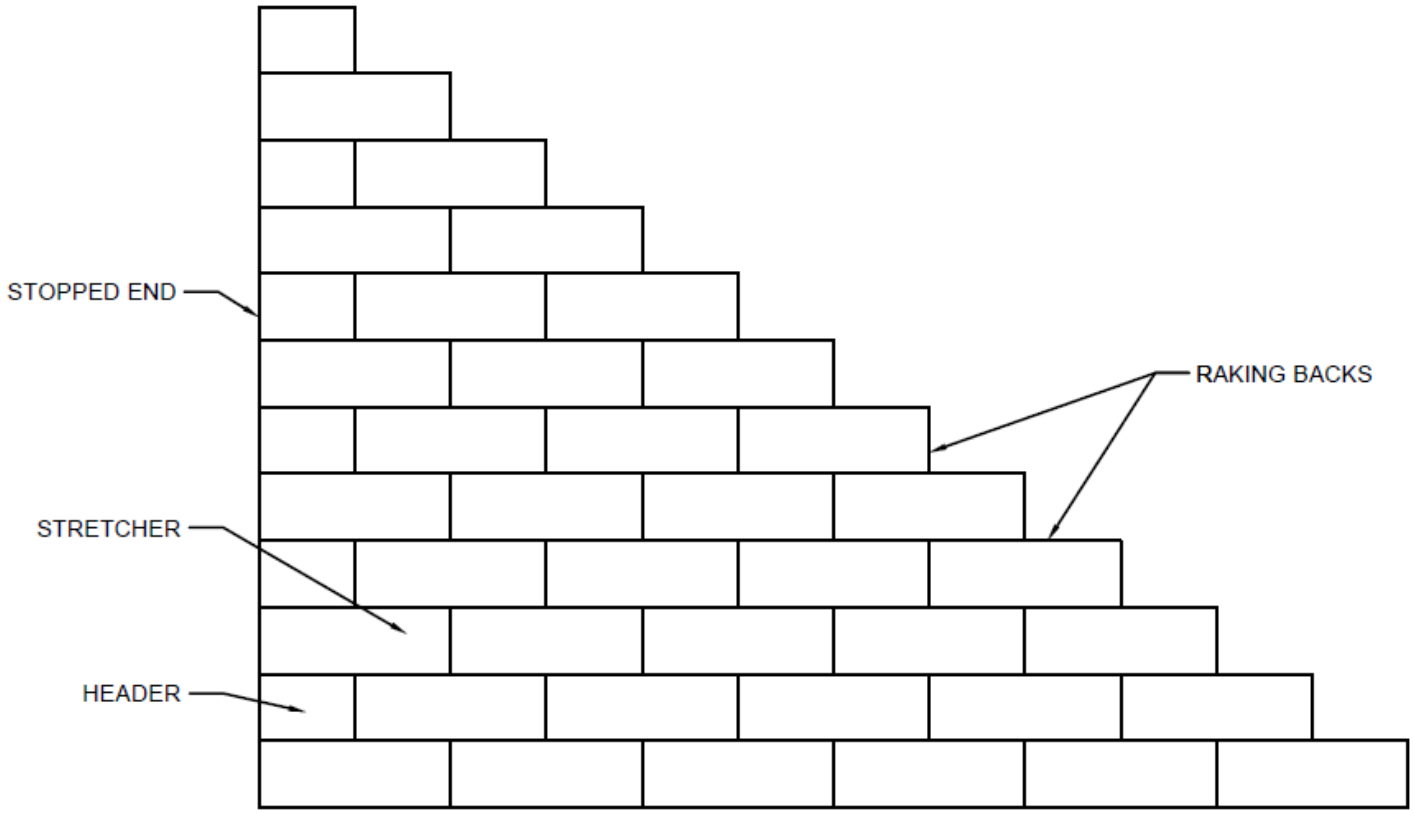

FRONT ELEVATION OF A ONE-BRICK WALL BUILT IN STRETCHER BOND
SCALE 1:10

[14]

RUBRIC: QUESTION 5					
PART OF DRAWING	**MARKING CRITERIA**	**POSSIBLE MARK**	**MARKER**	**INTERNAL MODERATOR**	**EXTERNAL MODERATOR**
Front elevation	Correct	2 height & length			
	Bond	2			
	Raking backs	11			
	Stopped end	1			
	Labelling	4			
Subtotal		20			
Divide by		**2,22**			
Overall correctness		**9**			
Line work		**2**			
Balanced layout and neatness		**1**			
Title & scale		**2**			
TOTAL		**14**			

NOTE: Do not allocate any marks for any part drawn in an incorrect position, except marks for hatching of that component where applicable

Copyright reserved

QUESTION 6

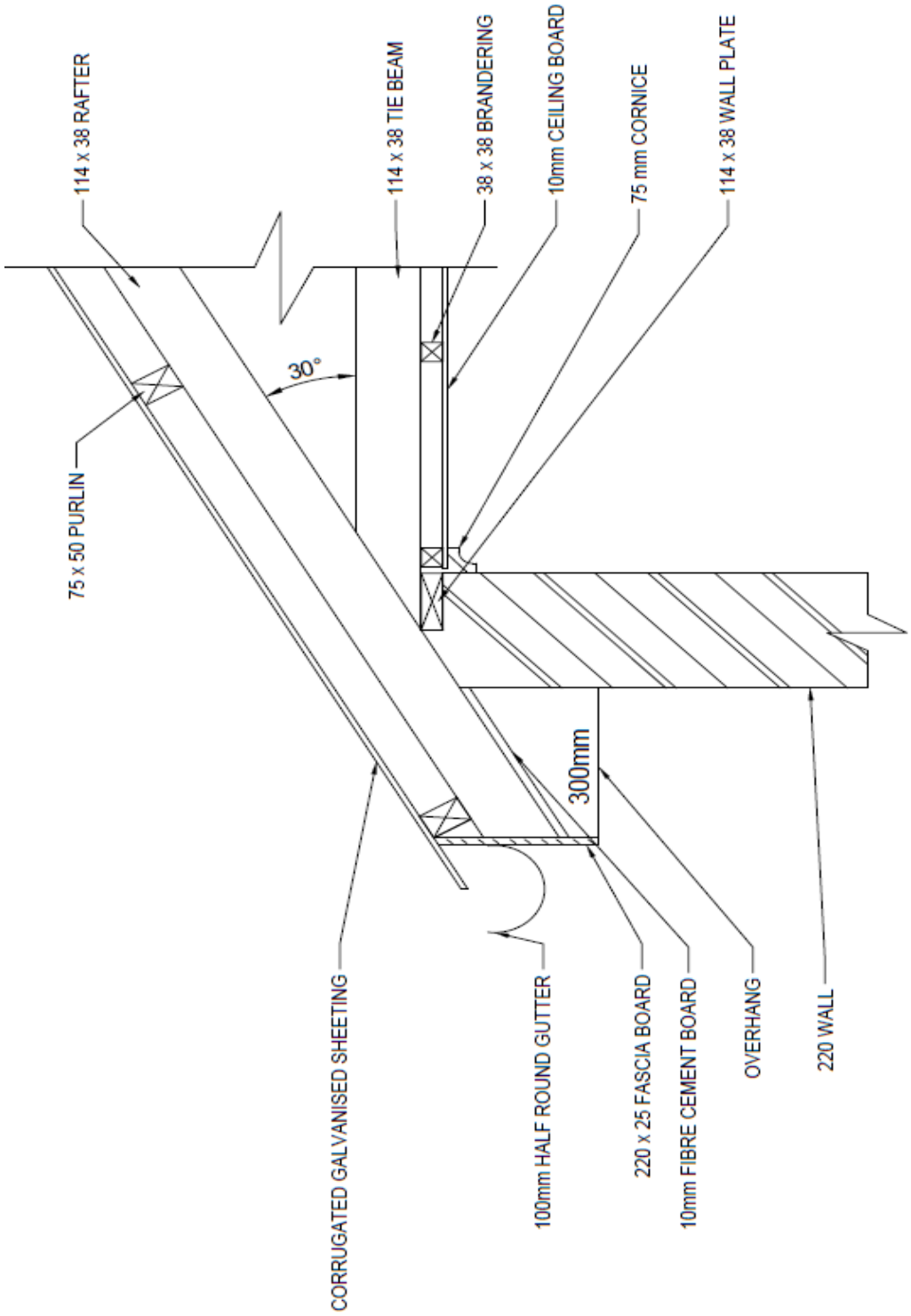

THE VERTICAL SECTION THROUGH ROOF AND EAVES

SCALE 1:10

[20]

RUBRIC: QUESTION 6					
PART OF DRAWING	**MARKING CRITERIA**	**POSSIBLE MARK**	**MARKER**	**INTERNAL MODERATOR**	**EXTERNAL MODERATOR**
Wall plate, cornice, ceiling, brandering	Correct position	4			
	Correct size	4			
	Hatching	3			
	Spacing	2			
	Labelling	4			
Rafter, tie beam, fibre board, wall	Correct position	4			
	Correct size	4			
	Hatching	1			
	Labelling	4			
Fascia board, purlin, roof covering, gutter	Correct position	4			
	Correct size	4			
	Hatching	2			
	Spacing	1			
	Labelling	4			
	Dimensions	2			
Subtotal		**47**			
Divide by		**4,27**			
Overall correctness		**11**			
Line work		**3**			
Accuracy		**2**			
Balanced layout and neatness		**2**			
Title & scale		**2**			
Total		**20**			

NOTE: Do not allocate any marks for any part drawn in an incorrect position, except marks for hatching of that component where applicable

TOTAL: 100

Copyright reserved