higher education & training

Department:
Higher Education and Training
REPUBLIC OF SOUTH AFRICA

MARKING GUIDELINE

NATIONAL CERTIFICATE

BUILDING DRAWING N1

1 AUGUST 2019

This marking guideline consists of 7 pages.

Copyright reserved

QUESTION 1

1.1 H
1.2 F
1.3 A
1.4 G
1.5 J
1.6 C
1.7 E
1.8 D
1.9 B
1.10 I

(10 × 1) **[10]**

QUESTION 2

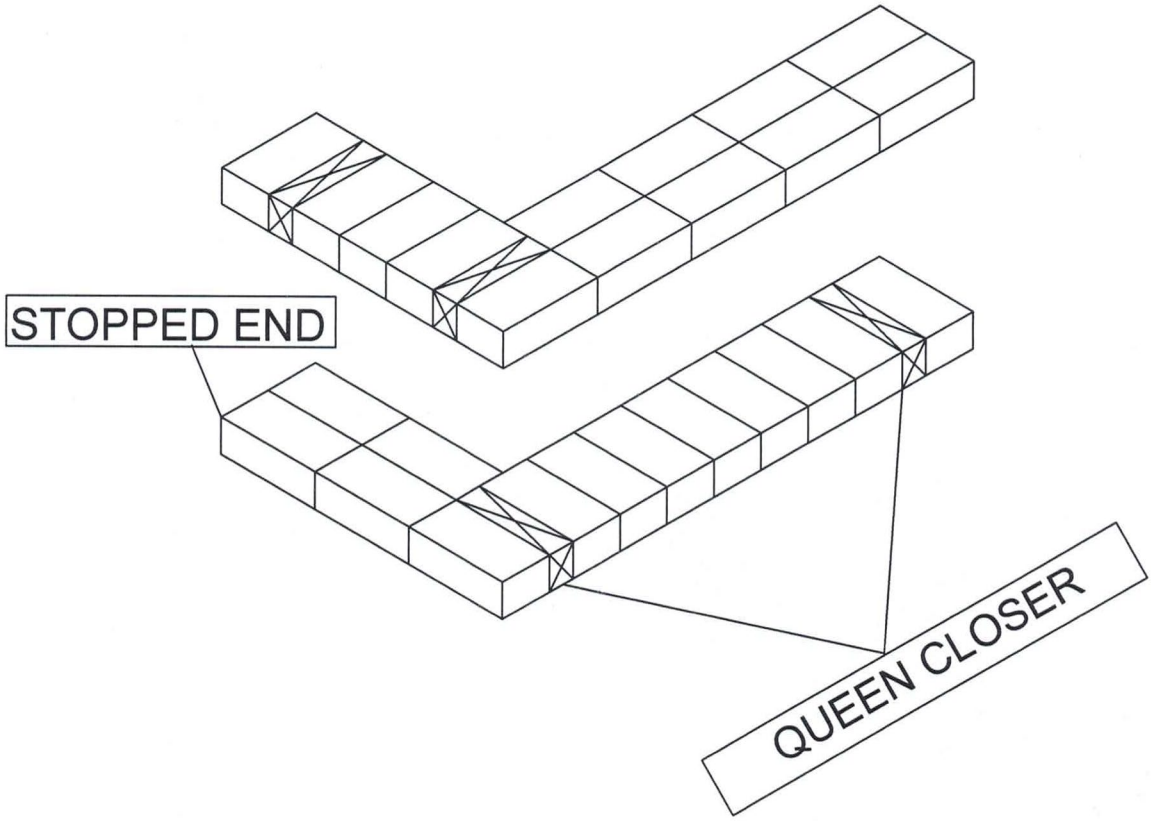

ISOMETRIC VIEW OF A ONE-BRICK CORNER BUILT IN ENGLISH BOND
SCALE 1:10 **[20]**

QUESTION 3

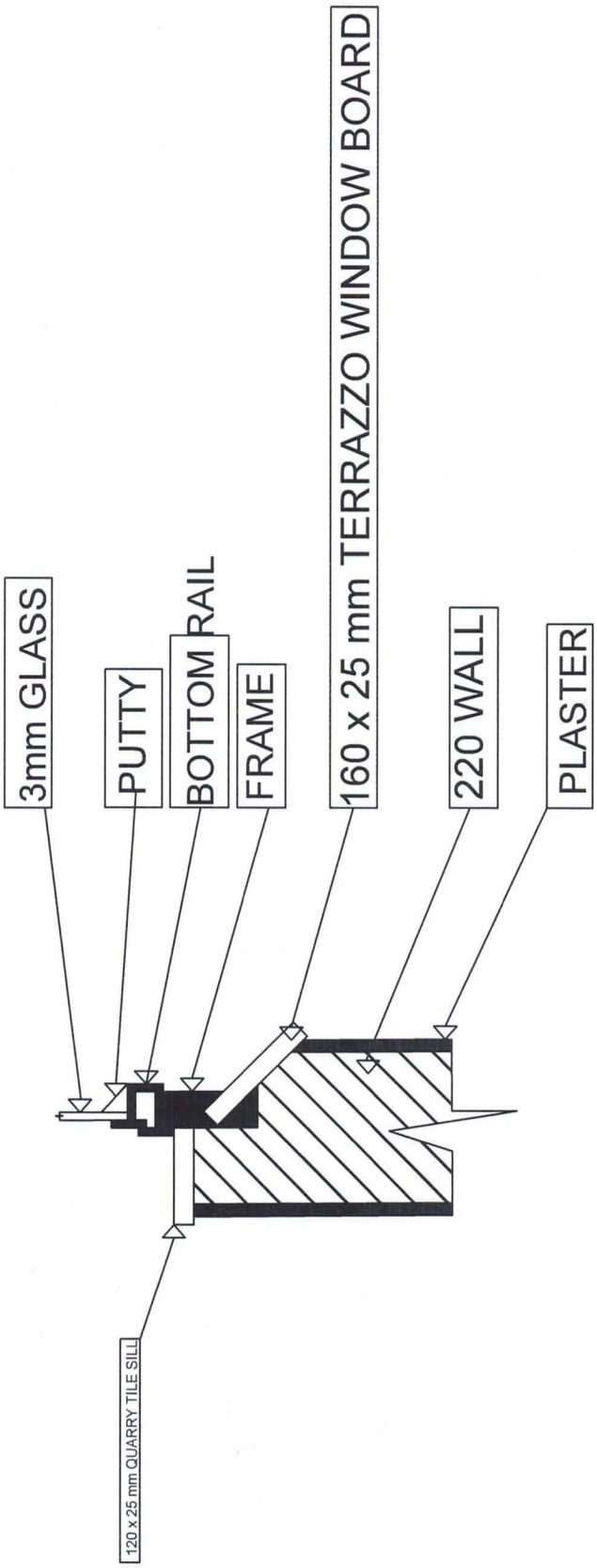

VERTICAL SECTION THROUGH BOTTOM SECTION OF STEEL-CASEMENT WINDOW
SCALE 1:2

[20]

QUESTION 4

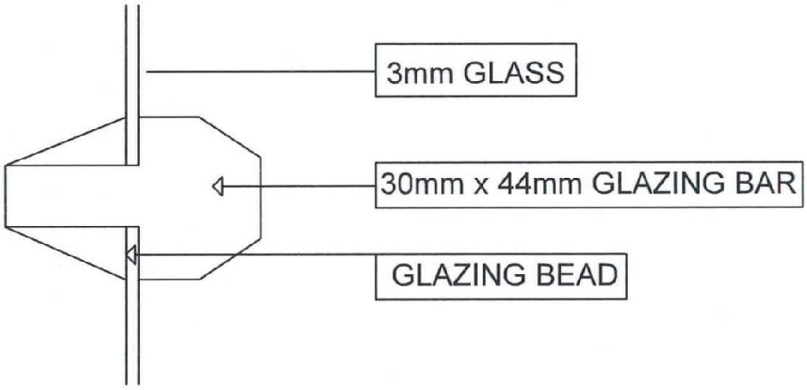

HORIZONTAL SECTION THROUGH GLAZING BEAD AND GLAZING BAR
SCALE 1:2 **[10]**

QUESTION 5

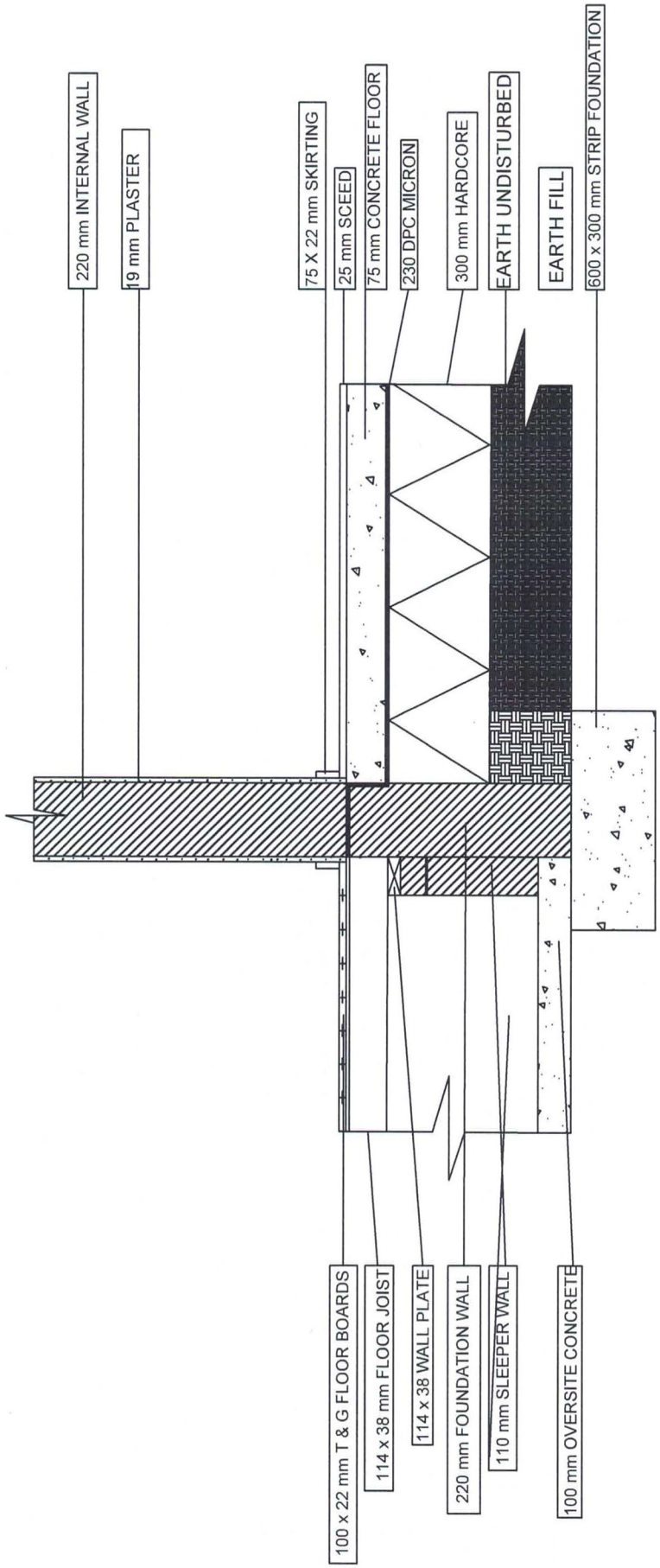

VERTICAL SECTION THROUGH FOUNDATION, FOUNDATION WALL, EXTERNAL WALL AND SLEEPER WALL
SCALE 1:10

[20]

QUESTION 6

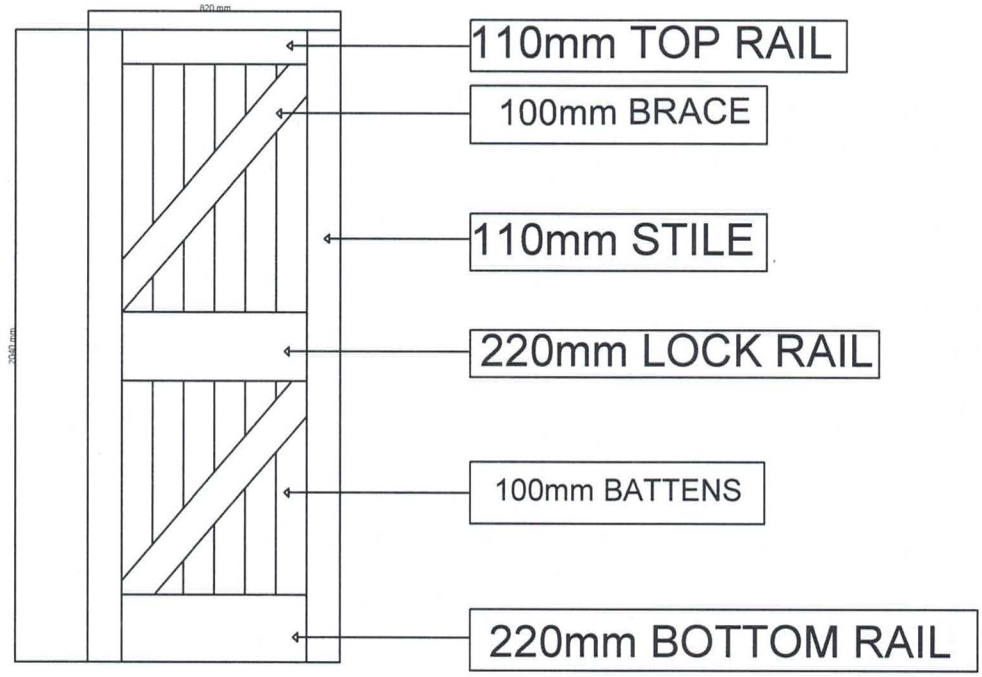

FRONT ELEVATION OF LEDGED, BRACED AND BATTENED DOOR
SCALE 1:10 **[20]**

TOTAL: 100

Copyright reserved