higher education & training

Department:
Higher Education and Training
REPUBLIC OF SOUTH AFRICA

MARKING GUIDELINE

NATIONAL CERTIFICATE

BUILDING DRAWING N1

20 JULY 2018

This marking guideline consists of 11 pages.

Copyright reserved

QUESTION 1

1.1 A
1.2 B
1.3 C
1.4 B
1.5 B
1.6 B
1.7 B
1.8 A
1.9 A
1.10 B

(10 × 1) **[10]**

QUESTION 2

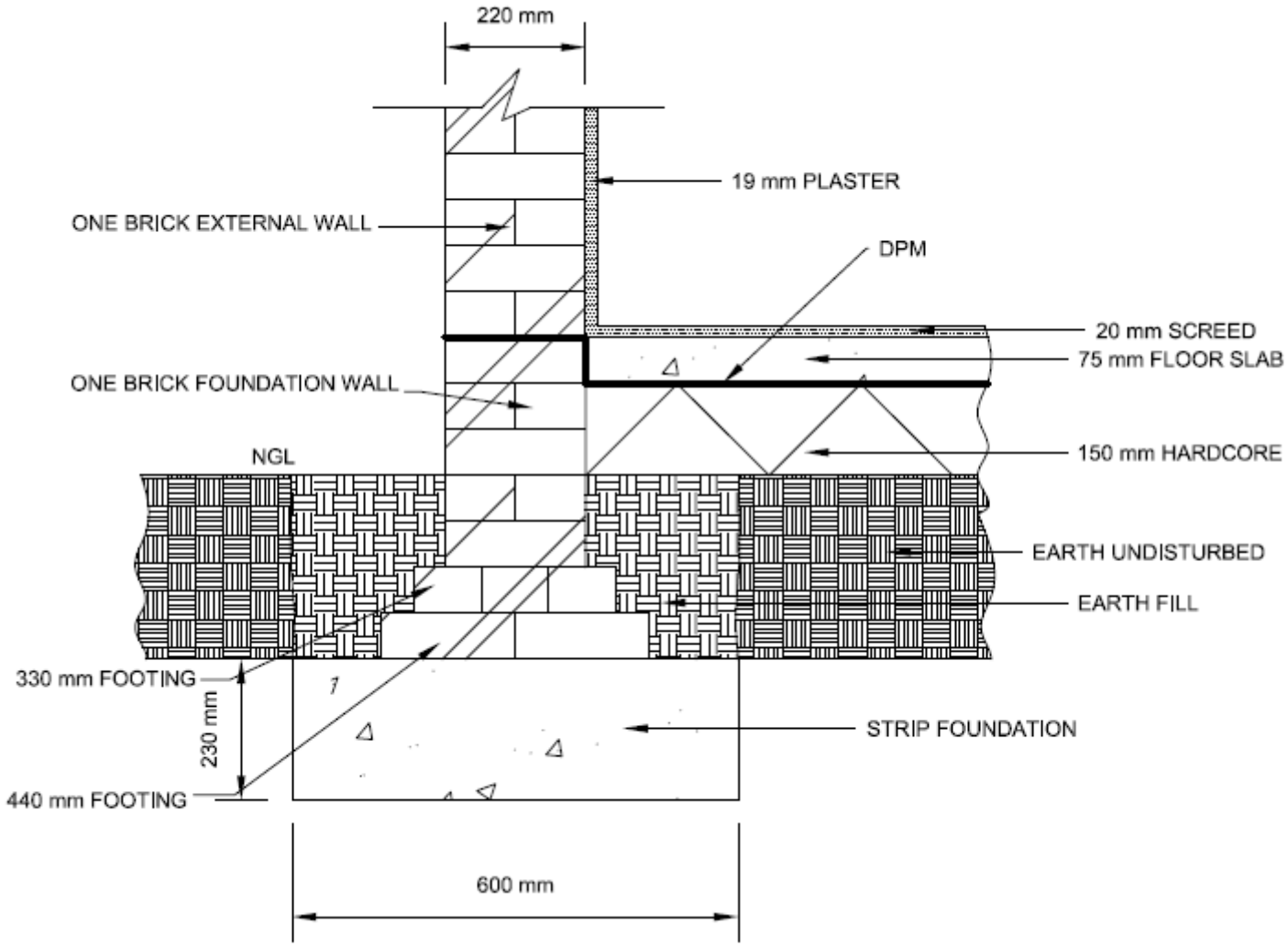

A VERTICAL SECTION THROUGH THE EXTERNAL WALL OF A HOUSE
SCALE 1:10

PART OF DRAWING	MARKING CRITERIA	POSSIBLE MARK	MARKER	INTERNAL MODERATOR
Strip foundation, 440 footing and 330 footing	Correct position	3		
	Correct size	3		
	Hatching	3		
	Labelling	3		
	Neatness	3		
Wall, foundation wall and hardcore	Correct position	3		
	Correct size	3		
	Hatching	3		
	Labelling	3		
	Neatness	3		
Plaster, screed and floor slab	Correct position	3		
	Correct size	3		
	Hatching	3		
	Labelling	3		
	Neatness	3		
Ground level	Correct position	2		
	Correct size	2		
	Hatching	4 (Earth fill x 2 Earth undisturbed x2)		
	Labelling	3(Earth fill, earth undisturbed and GL)		
	Neatness	4(Earth fill x 2 Earth undisturbed x2)		
DPM	Correct position	3		
	Labelling	1		
	TOTAL	**64**		
	Divide total by 4,57	**14**		
	Accuracy and setting out	**4**		
	Title	**1**		
	Scale	1		
	GRAND TOTAL	**20**		

[20]

Copyright reserved

QUESTION 3

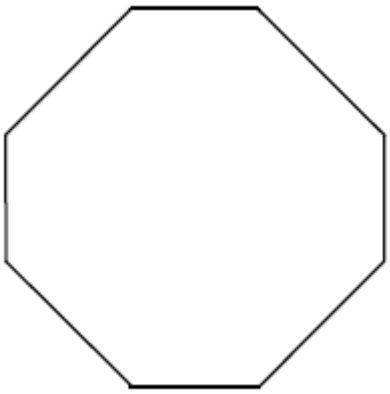

AN OCTAGON POLYGON WITH EIGHT EQUAL SIDES
SCALE 1:1

RUBRICS FOR QUESTION 3: OCTAGON				
PART OF DRAWING	**MARKING CRITERIA**	**POSSIBLE MARK**	**MARKER**	**INTERNAL MODERATOR**
Octagon	Correctness	4		
	8 sides	8		
	Correct size	8		
	Neatness	2		
	Total	22		
	Divide total by 3.66	6		
	Balanced layout and accuracy	2		
	Title	1		
	Scale	1		
	Grand total	**10**		

[10]

QUESTION 4

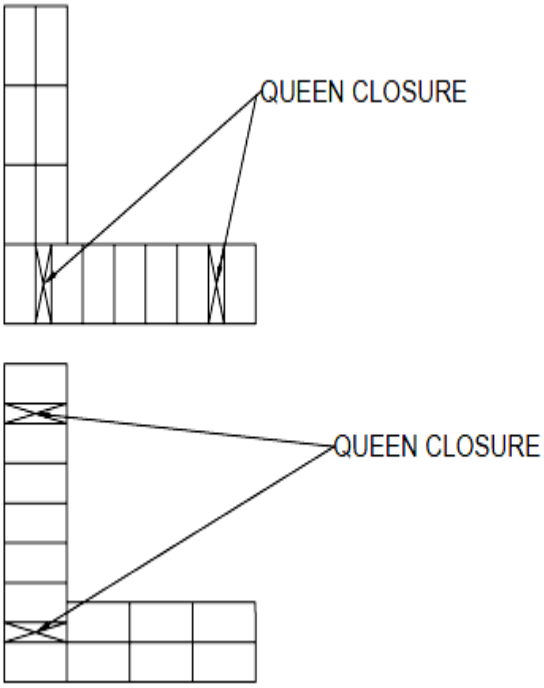

TWO ALTERNATE PLAN COURSES OF A ONE-BRICK CORNER BUILT IN ENGLISH BOND
SCALE 1:10

RUBRICS FOR QUESTION 4:ENGLISH BOND CORNER				
PART OF DRAWING	**MARKING CRITERIA**	**POSSIBLE MARK**	**MARKER**	**INTERNAL MODERATOR**
Course 1	Drawing correct size	6		
	Brick pattern correct	6		
	Corner correct	2		
	Stop ends correct	4		
	Brick sizes correct	6		
	Labels	2		
Course 2	Drawing correct size	6		
	Brick pattern correct	6		
	Corner correct	2		
	Stop ends correct	4		
	Brick sizes correct	6		
	Labels	2		
	Views below each other	2		
	Subtotal	54		
	Divide total by 3.37	16		
	Balanced layout and neatness	2		
	Title	1		
	Scale	1		
	Grand total	**20**		

[20]

QUESTION 5

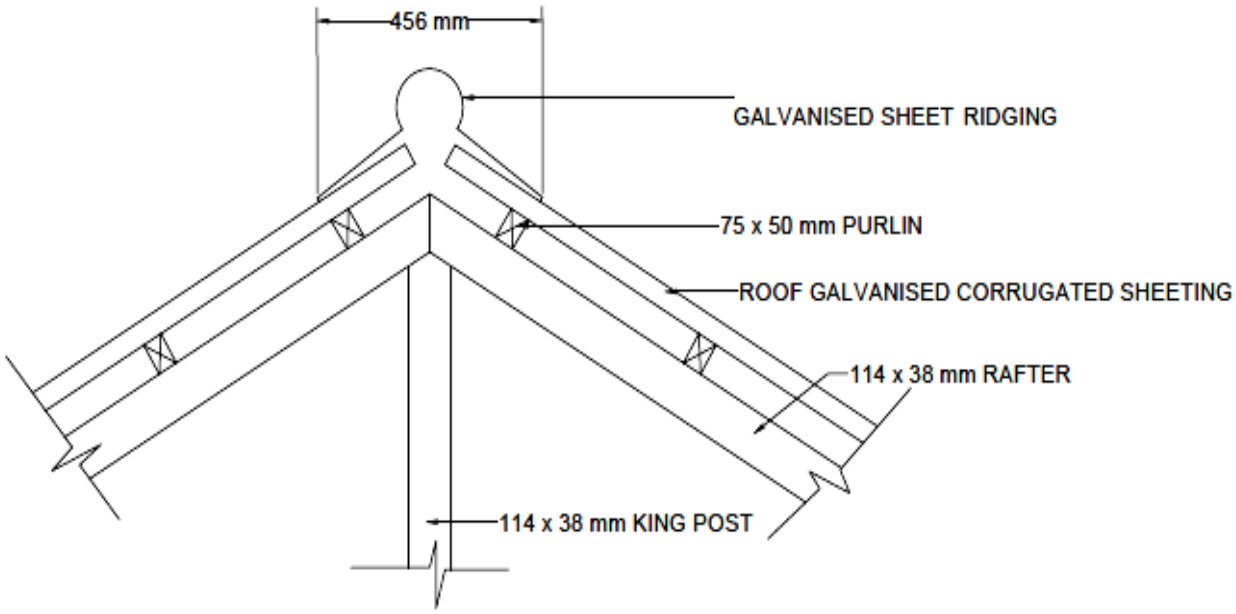

A VERTICAL SECTION THROUGH A RIDGE OF A ROOF
SCALE 1:10

RUBRICS FOR QUESTION 5:VERTICAL SECTION THROUGH A RIDGE				
PART OF DRAWING	**MARKING CRITERIA**	**POSSIBLE MARK**	**MARKER**	**INTERNAL MODERATOR**
Rafters, king post	Correct position	3(rafters x 2)		
	Size correct	3(rafters x 2)		
	Labelling	2		
	Neatness	3(rafters x 2)		
Ridge, roof cover	Correct position	3(roof cover x 2)		
	Size correct	3(roof cover x 2)		
	Labelling	2		
	Neatness	3(roof cover x 2)		
Purlins	Correct position	4		
	Size correct	4		
	Hatching	4		
	Spacing	4		
	Labelling	1		
	Neatness	4		
Roof pitch and 456 mm method	Correctness	3(pitch x 2)		
	Total	46		
	Divide total by 3.53	13		
	Balanced layout and accuracy	5		
	Title	1		
	Scale	1		
	Grand total	**20**		

[20]

QUESTION 6

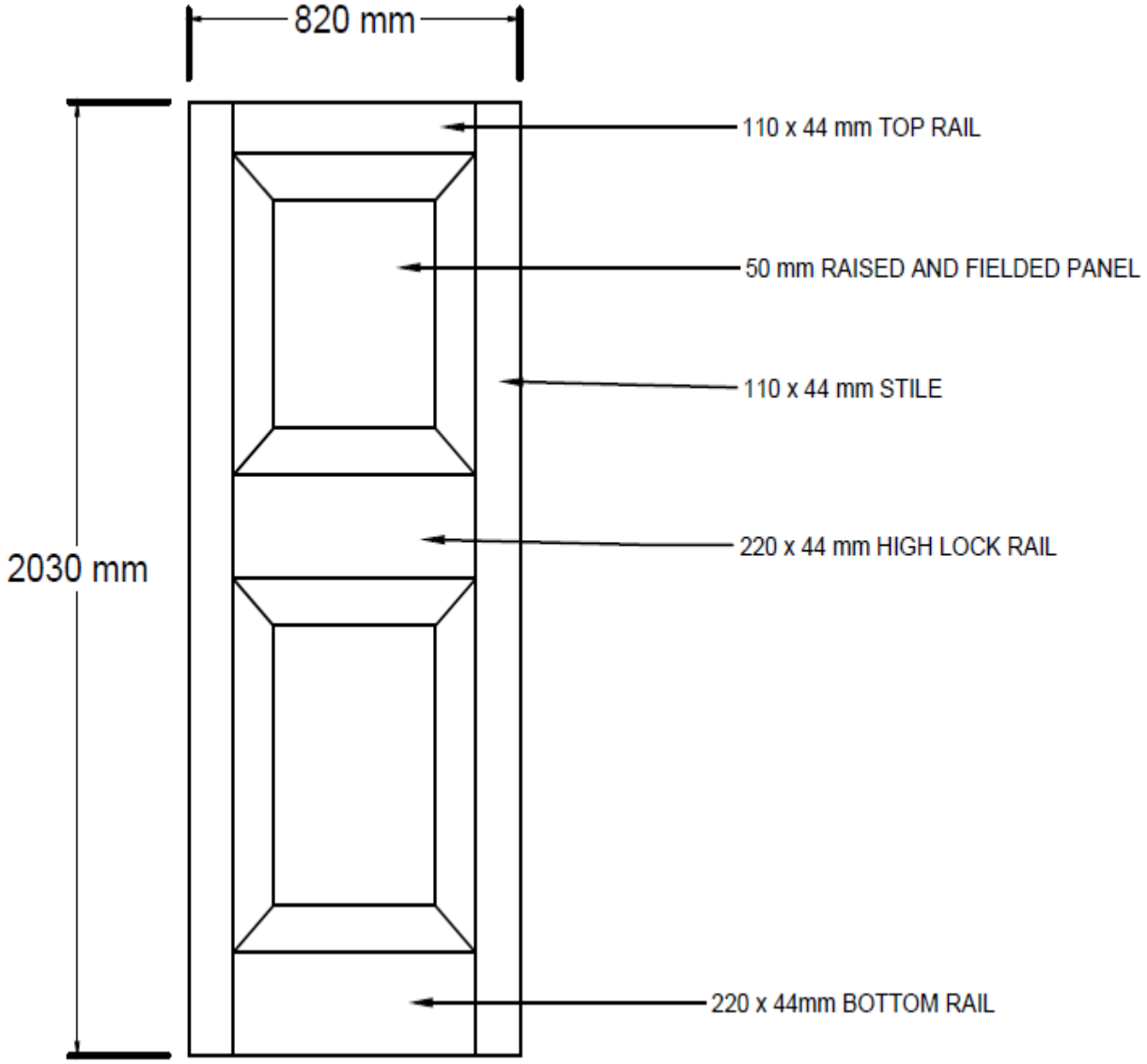

THE OUTSIDE VIEW OF THE EXTERNAL DOOR
SCALE 1:10

RUBRICS FOR QUESTION 6: EXTERNAL DOOR				
PART OF DRAWING	**MARKING CRITERIA**	**POSSIBLE MARK**	**MARKER**	**INTERNAL MODERATOR**
Top rail and bottom rail	Correct position	2		
	Size correct	2		
	Labelling	2		
	Neatness	2		
Stiles and high lock rail	Correct position	2		
	Size correct	2		
	Labelling	2		
	Neatness	2		
Raised and fielded panels	Correct position	2		
	Size correct	2		
	Labelling	1		
	Neatness	2		
Dimensions	Correctness	2		
	Total	17		
	Divide total by 1.31	13		
	Balanced layout and accuracy	5		
	Title	1		
	Scale	1		
	Grand total	**20**		

[20]

TOTAL: 100

Copyright reserved