higher education & training

Department:
Higher Education and Training
REPUBLIC OF SOUTH AFRICA

MARKING GUIDELINE

NATIONAL CERTIFICATE

BUILDING DRAWING N1

6 April 2020

This marking guideline consists of 9 pages.

Copyright reserved

QUESTION 1

1.1 B
1.2 A
1.3 B
1.4 A
1.5 C
1.6 D
1.7 B
1.8 A
1.9 D
1.10 C

(10 × 1) **[10]**

QUESTION 2

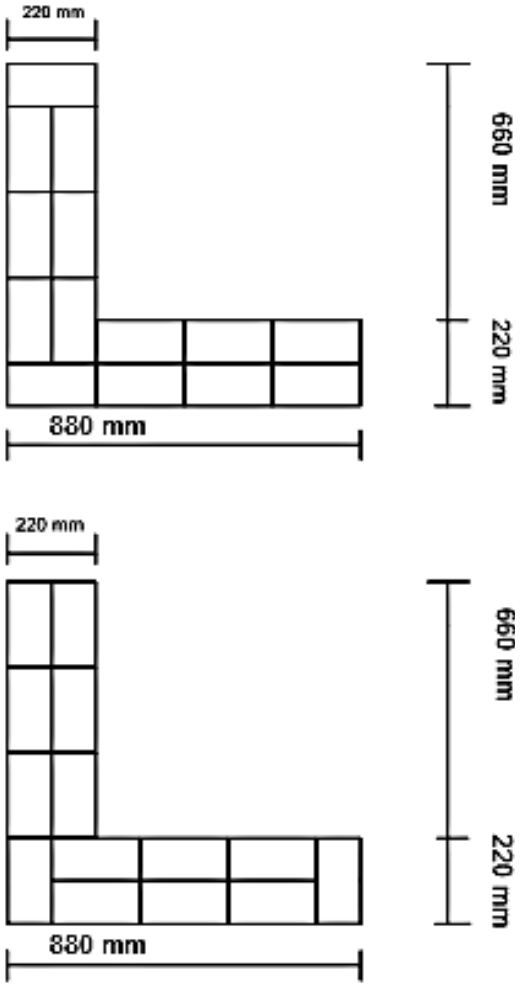

TWO ALTERNATE PLAN COURSES IN STRETCHER BOND
SCALE 1:10 **[20]**

QUESTION 2: RUBRIC					
PART OF DRAWING	**MARKING CRITERIA**	**POSSIBLE MARK**	**MARKER**	**INTERNAL MODERATOR**	**EXTERNAL MODERATOR**
Course 1	Drawing correct size	4			
	Brick pattern correct	4			
	Corner	2			
	Stop ends correct	4			
	Brick sizes correct	4			
	Dimensions	4			
	TOTAL	**22**			
Course 2	Drawing correct size	4			
	Brick pattern correct	4			
	Corner	2			
	Stop ends correct	4			
	Brick sizes correct	4			
	Dimensions	4			
	Views below each other	2			
	TOTAL	**24**			
Add totals		**46**			
Divide total by 3,28		**14**			
Balanced layout and neatness		**4**			
Title		**1**			
Scale		**1**			
TOTAL:		**20**			

Copyright reserved

QUESTION 3

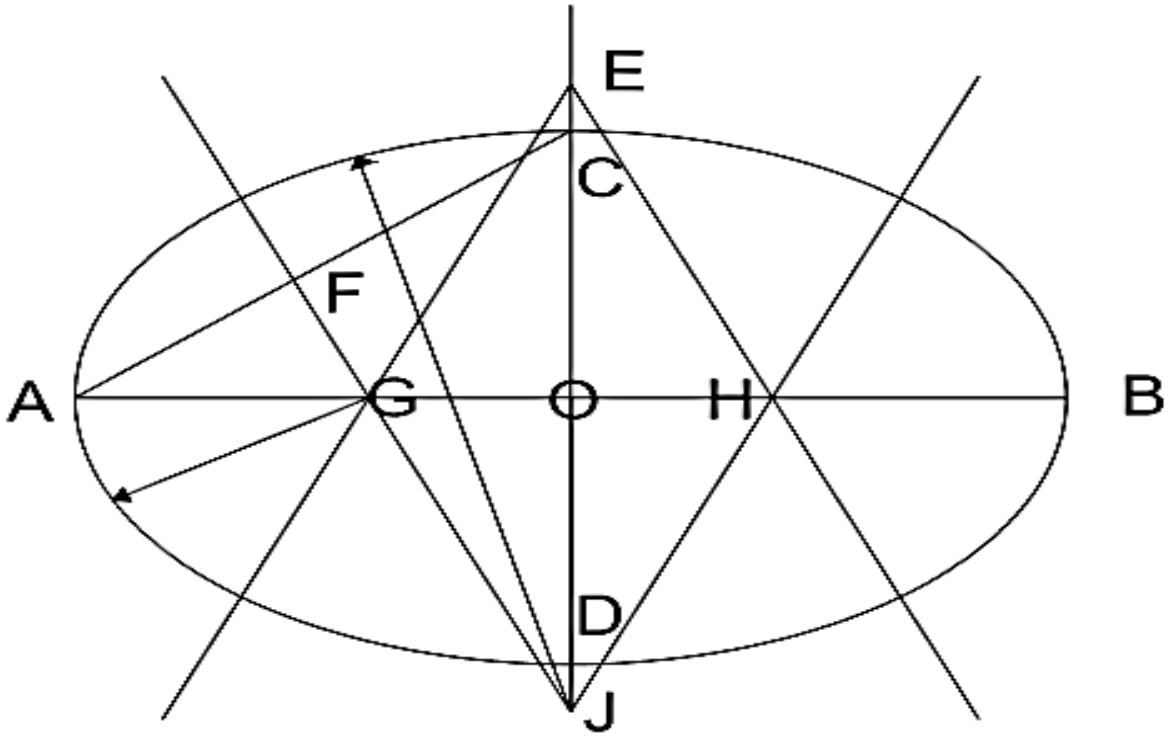

ELLIPSE
SCALE 1:2 **[15]**

QUESTION 3: RUBRIC					
PART OF DRAWING	**MARKING CRITERIA**	**POSSIBLE MARK**	**MARKER**	**INTERNAL MODERATOR**	**EXTERNAL MODERATOR**
Ellipse	Major axis correct	2			
	Vertical axis correct	2			
	Correctness of scale	2			
	Ellipse	4			
	Neatness and line work	3			
	Title	1			
	Scale	1			
	TOTAL:	**15**			

Copyright reserved

QUESTION 4

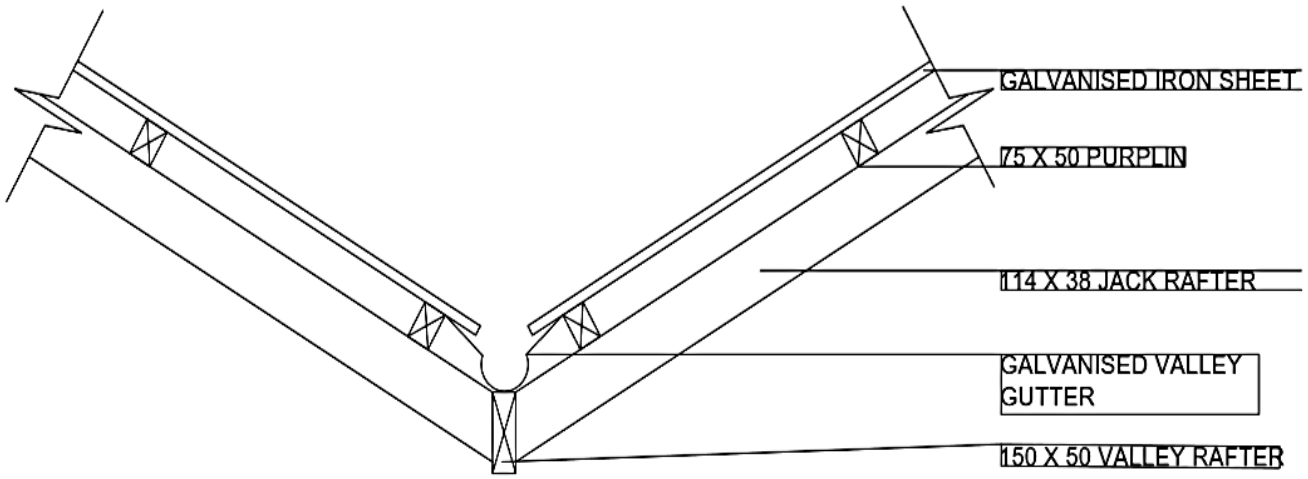

VERTICAL SECTION THROUGH AN OPEN VALLEY GUTTER
SCALE 1:10 **[15]**

QUESTION 4: RUBRIC					
PART OF DRAWING	**MARKING CRITERIA**	**POSSIBLE MARK**	**MARKER**	**INTERNAL MODERATOR**	**EXTERNAL MODERATOR**
Purlin, jack, valley rafter	Correctness	5 (purlin × 2, valley rafter × 2)			
	Correct shape	4 (purlin × 2, jack rafter × 2)			
	Hatching	3 (purlin × 2, valley rafter)			
	Labelling	3			
Roof covering, valley gutter	Correctness	3 (roof cover × 2)			
	Correct shape	1 (valley gutter)			
	Labelling	2			
	Pitch	2			
Subtotal		**23**			
Divide total by 2,55		**9**			
Balanced layout and neatness		**4**			
Title		**1**			
Scale		**1**			
TOTAL:		**15**			

Copyright reserved

QUESTION 5

5.1

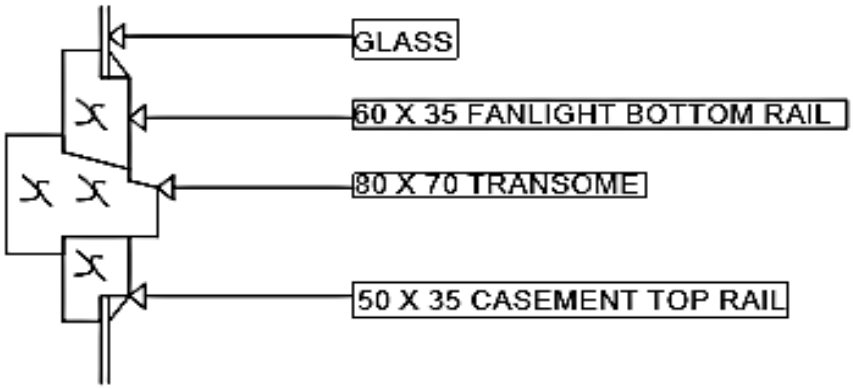

TRANSOME
SCALE 1:2 (10)

5.2

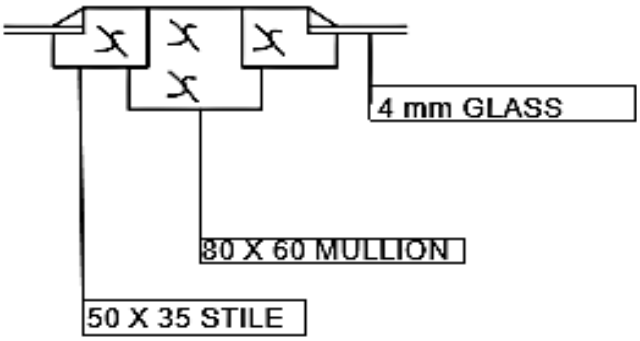

MULLION
SCALE 1:2 (10)
[20]

QUESTION 5 RUBRIC					
PART OF DRAWING	**MARKING CRITERIA**	**POSSIBLE MARK**	**MARKER**	**INTERNAL MODERATOR**	**EXTERNAL MODERATOR**
5.1 Transome, fanlight bottom rail, casement top rail, glass	Correctness	5 (glass × 2)			
	Correct size	5 (glass × 2)			
	Shape	3 (transome, bottom, top rail)			
	Hatching	3 (transome, bottom, top rail)			
	Labelling	4			
5.2 Mullion, stiles, glass	Correctness	5 (glass × 2, stile × 2)			
	Correct size	5 (glass × 2, stile × 2)			
	Shape	3 (stile × 2)			
	Hatching	3 (mullion, stile × 2)			
	Labelling	3			
Subtotal		**39**			
Divide total by 3,25		**12**			
Balanced layout and neatness		**4**			
Title		**2**			
Scale		**2**			
TOTAL:		**20**			

Copyright reserved

QUESTION 6

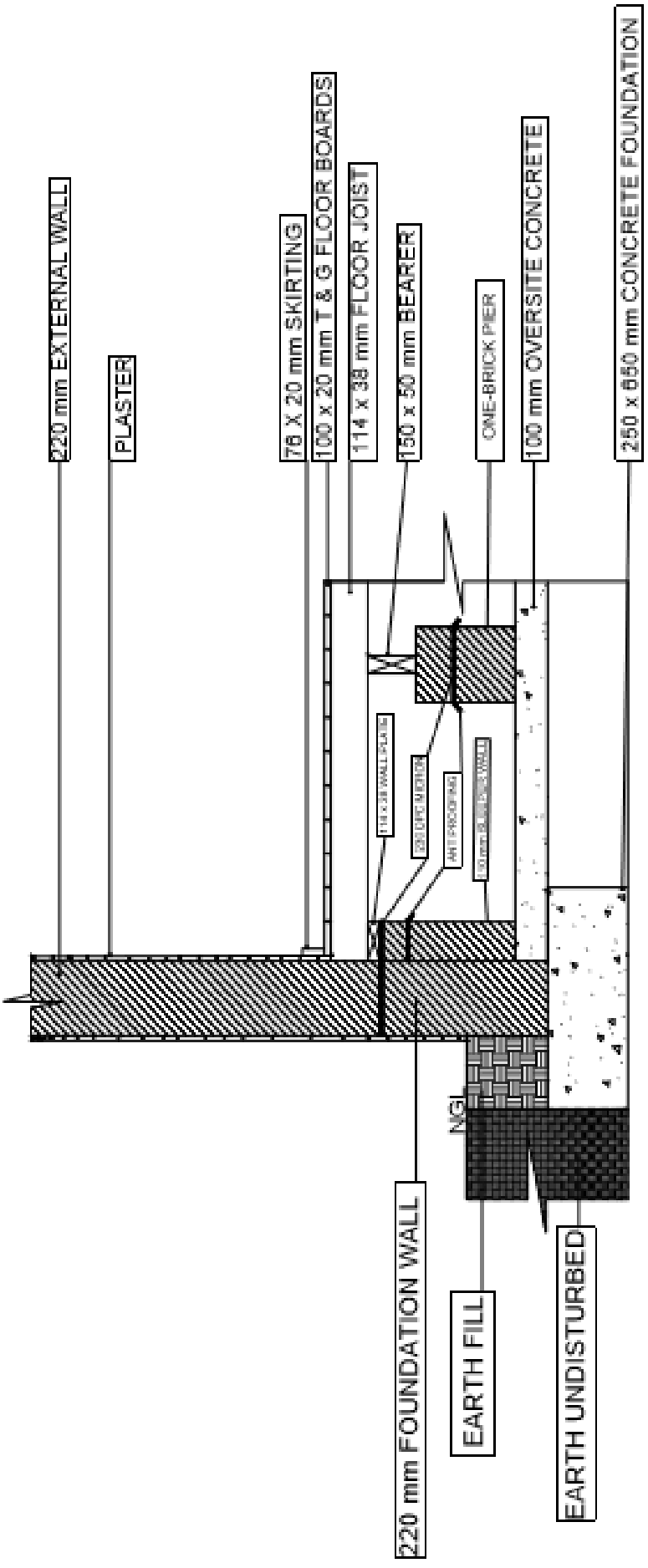

VERTICAL SECTION THROUGH THE FOUNDATION, FOUNDATION WALL, EXTERNAL WALL, SLEEPER WALL AND PIER
SCALE 1:10

[20]

QUESTION 6: RUBRIC					
PART OF DRAWING	**MARKING CRITERIA**	**POSSIBLE MARK**	**MARKER**	**INTERNAL MODERATOR**	**EXTERNAL MODERATOR**
Concrete foundation, foundation wall, external wall, plaster	Correctness	5 (plaster × 2)			
	Correct size	5 (plaster × 2)			
	Hatching	5 (plaster × 2)			
	Labelling	4			
Oversite concrete, sleeper wall, pier	Correctness	3			
	Correct size	3			
	Hatching	3			
	Labelling	3			
Wall plate, bearer, DPC, ant-proofing	Correctness	4			
	Correct size	2			
	Hatching	2 (wall plate, bearer)			
	Labelling	4			
Floor joist, floor boards, skirting	Correctness	3			
	Correct size	3			
	Labelling	3			
Ground level	Correctness	1			
	Correct size	1			
	Hatching	2			
	Labelling	2			
Subtotal		**58**			
Divide total by 4,14		**14**			
Balanced layout and neatness		**4**			
Title		**1**			
Scale		**1**			
TOTAL:		**20**			

TOTAL: 100

Copyright reserved