higher education & training

Department:
Higher Education and Training
REPUBLIC OF SOUTH AFRICA

T200**(E)**(A3)T

NATIONAL CERTIFICATE

BUILDING DRAWING N1

(8090001)

3 April 2019 (X-Paper)
09:00–13:00

REQUIREMENTS: ONE A2 drawing sheet

Drawing instruments may be used.

This question paper consists of 6 pages.

Copyright reserved

DEPARTMENT OF HIGHER EDUCATION AND TRAINING
REPUBLIC OF SOUTH AFRICA

NATIONAL CERTIFICATE
BUILDING DRAWING N1
TIME: 4 HOURS
MARKS: 100

INSTRUCTIONS AND INFORMATION

1. Answer ALL the questions.
2. Read ALL the questions carefully.
3. Number the answers according to the numbering system used in this question paper.
4. Do ALL drawings to the required scale.
5. Do ALL drawings, as well as candidate information, in pencil.
6. Drawings must be neat, reasonably large, in proportion and fully labelled in capital letters.
7. ALL drawings must comply with the relevant SANS (SABS) recommended codes.
8. Use your discretion where dimensions are NOT given.
9. A balanced layout is very important and candidates will be penalised for poor planning.
10. Work neatly.

Copyright reserved

QUESTION 1

FIGURE 1 shows a roof plan and details.

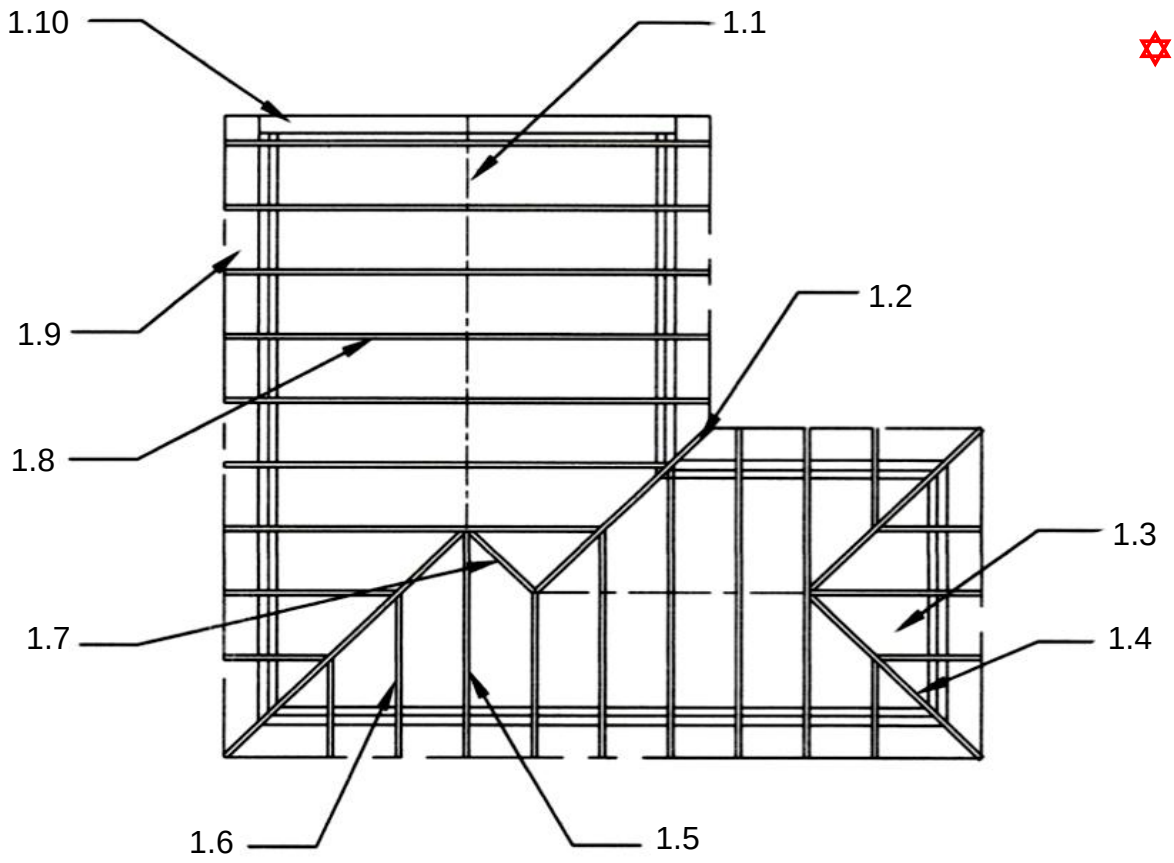

FIGURE 1

Identify the parts by writing only the answer next to the question number (1.1–1.10) in the ANSWER BOOK. (10 × 1) **[10]**

QUESTION 2

FIGURE 2 shows the outline of a one-brick and a half-brick T-junction.

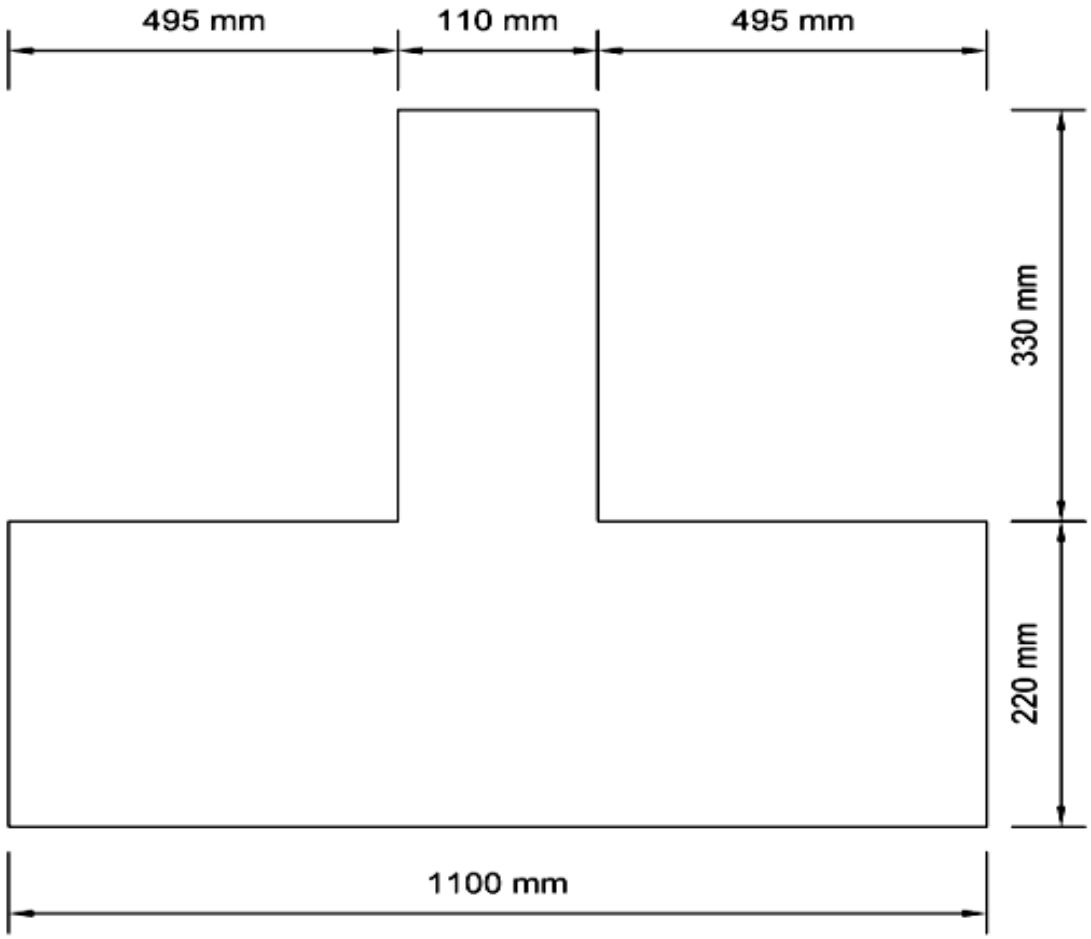

FIGURE 2

Use the same dimensions and draw, to scale 1:10, TWO isometric plan courses built in stretcher bond. Make sure that the views are drawn directly below each other. Include at least ONE course per view. Label cut bricks in ALL views. **[20]**

QUESTION 3

TWO prestressed, precast concrete lintels are fixed at a window opening to support the load above the window opening.

Draw, to scale 1:5, a vertical section through a steel window opening and show the position of the lintels.

Use the following specifications:

Wall:	220 mm (show at least THREE courses above the lintel)
Plaster:	19 mm interior and exterior
Precast lintel:	110 mm × 75 mm
Frame:	Steel
Top rail:	Steel
Putty:	On the exterior
Glass:	3 mm
Damp-proof course:	375 micron
Brick force:	SANS approved

[20]

QUESTION 4

An external door is 2 040 mm high, 820 mm wide and 44 mm thick. The upper portion of the door consists of FOUR equal glass panels and the bottom part of the door consists of a single raised and fielded panel.

Draw, to scale 1:10, the outside view of the external door using the following specifications:

- Top rail: 110 mm × 44 mm
- Lock rail: 220 mm × 44 mm (the top of the lock rail is 1 300 mm from the bottom of the door)
- Bottom rail: 220 mm × 44 mm
- Stiles: 110 mm × 44 mm
- Raised and fielded panel: 50 mm thick
- Glazing bead: 15 mm

NOTE: Include dimension lines. **[20]**

QUESTION 5

Draw, to scale 1:10, the front view of a semicircular arch constructed in axed bricks. The arch has a span of 600 mm and a rise of 300 mm. Include the dimension of the span.

Show the following on the arch:

- Span
- Rise
- Key brick
- Template
- Intrados
- Extrados **[20]**

QUESTION 6

Draw, to scale 1:2, an isometric view of a bevelled closer. Include the dimensions but do NOT show any hidden details. **[10]**

TOTAL: 100

Copyright reserved