higher education & training

Department:
Higher Education and Training
REPUBLIC OF SOUTH AFRICA

MARKING GUIDELINE

NATIONAL CERTIFICATE

BUILDING DRAWING N1

23 MARCH 2018

This marking guideline consists of 12 pages.

Copyright reserved

QUESTION 1

1.1

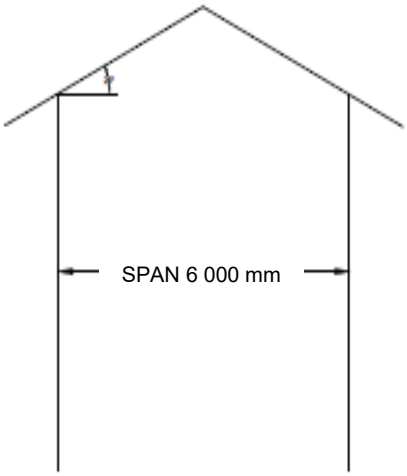

COUPLE TRUSS

1.2

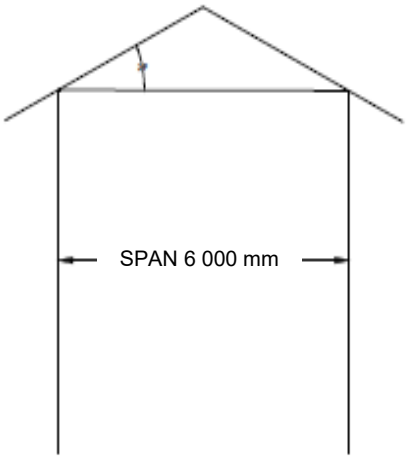

COUPLE CLOSE TRUSS **[10]**

RUBRIC FOR QUESTION 1				
PART OF DRAWING	**MARKING CRITERIA**	**POSSIBLE MARK**	**MARKER**	**INTERNAL MODERATOR**
1.1 Couple truss	Correctness	4		
	Span	1		
	Pitch	1		
	Neatness	2		
1.2 Couple close truss	Correctness	4		
	Span	1		
	Pitch	1		
	Neatness	2		
	Subtotal	**16**		
	Divide by 2,66	6		
	Balanced layout and neatness	2		
	Title	1		
	Scale	1		
	TOTAL:	**10**		

Copyright reserved

QUESTION 2

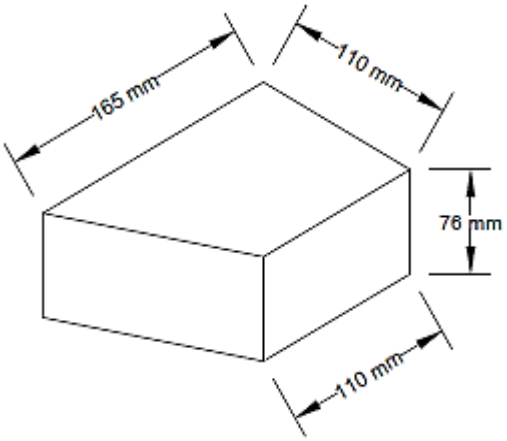

BEVELLED BAT-LARGE
SCALE 1 : 2 **[10]**

RUBRIC FOR QUESTION 2				
PART OF DRAWING	**MARKING CRITERIA**	**POSSIBLE MARK**	**MARKER**	**INTERNAL MODERATOR**
Bevelled bat-large	Correctness	4		
	Correct size	9		
	Dimension Lines	4		
	Neatness	2		
	Subtotal	**19**		
	Divide by 3,16	6		
	Balanced layout and neatness	2		
	Title	1		
	Scale	1		
	TOTAL:	**10**		

QUESTION 3

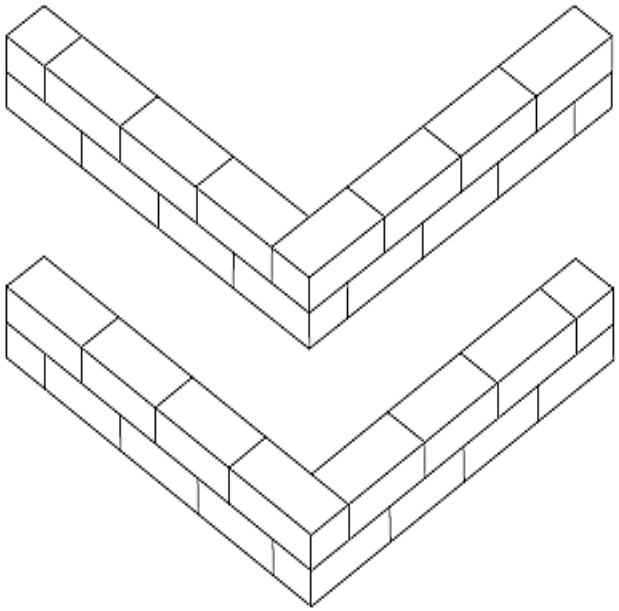

TWO ISOMETRIC PLAN COURSES OF A HALF-BRICK INTERNAL WALL BUILT IN STRETCHER BOND
SCALE 1 : 10 **[20]**

Copyright reserved

RUBRIC FOR QUESTION 3				
PART OF DRAWING	**MARKING CRITERIA**	**POSSIBLE MARK**	**MARKER**	**INTERNAL MODERATOR**
Isometric view	Correct axis	2		
	Alignment	1		
Course 1	Drawing correct size	8		
	Brick pattern correct	6		
	Corner correct	2		
	Stop ends correct	4		
	Brick size correct	6		
Course 2	Brick pattern correct	6		
	Corner correct	2		
	Stop ends correct	4		
	Brick size correct	6		
	Views below each other	2		
	Subtotal	**49**		
	Divide by 3,5	14		
	Balanced layout and neatness	4		
	Title	1		
	Scale	1		
	TOTAL:	**20**		

QUESTION 4

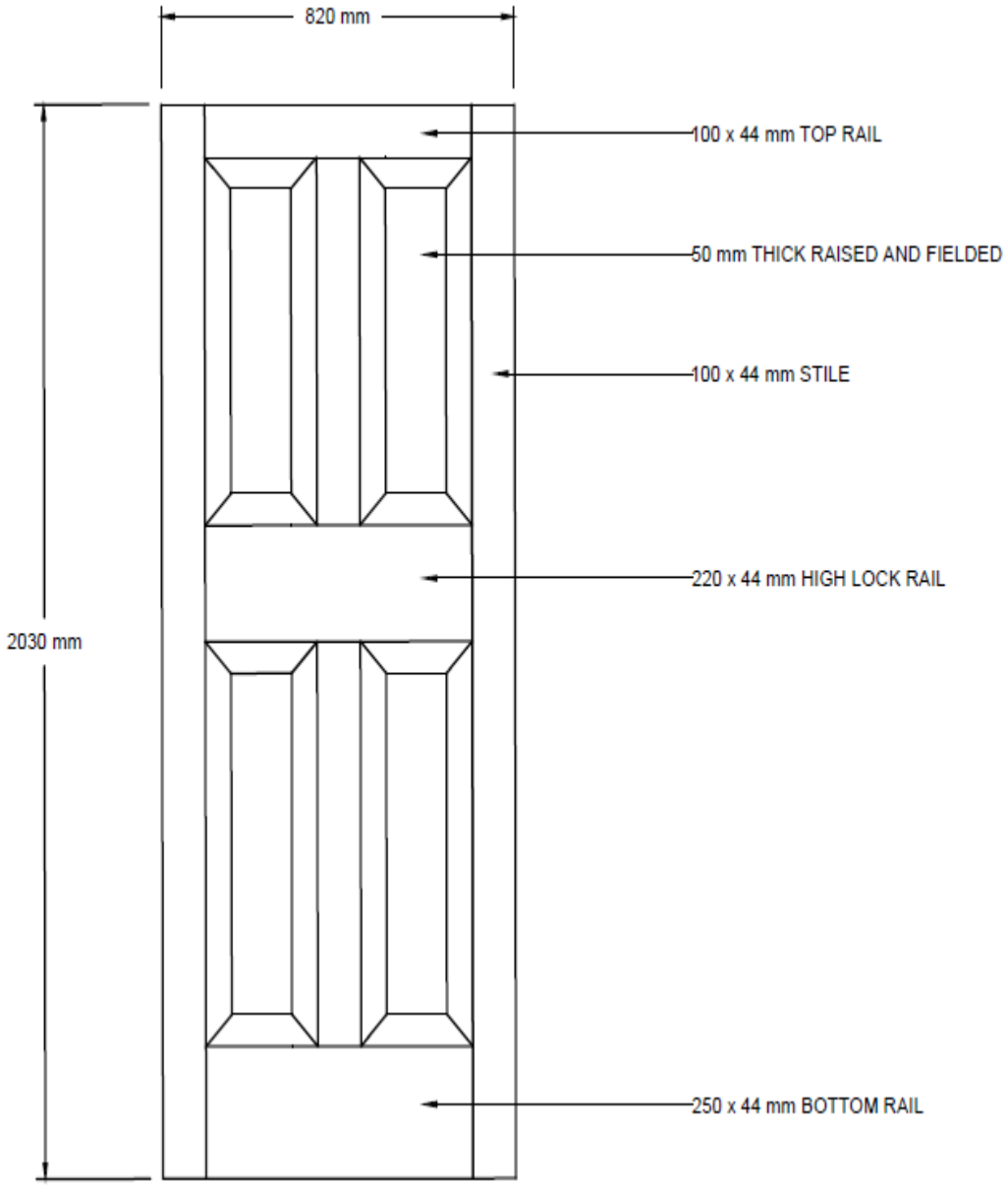

OUTSIDE VIEW OF THE EXTERNAL DOOR
SCALE 1 : 10 **[20]**

RUBRIC FOR QUESTION 4				
PART OF DRAWING	**MARKING CRITERIA**	**POSSIBLE MARK**	**MARKER**	**INTERNAL MODERATOR**
Top rail, high lock rail and bottom rail	Correct position	3		
	Size correct	3		
	Labelling	3		
	Neatness	3		
Stiles and muntin	Correct position	4 (muntin × 2 stiles × 2)		
	Size correct	4 (muntin × 2 stiles × 2)		
	Labelling	2		
	Neatness	4 (muntin × 2 stiles × 2)		
Raised and fielded panels	Correct position	4		
	Size correct	4		
	Labelling	1		
	Neatness	4		
Dimensions	Correctness	2		
	Subtotal	**41**		
	Divide by 3,41	12		
	Balanced layout and accuracy	6		
	Title	1		
	Scale	1		
	TOTAL:	**20**		

QUESTION 5

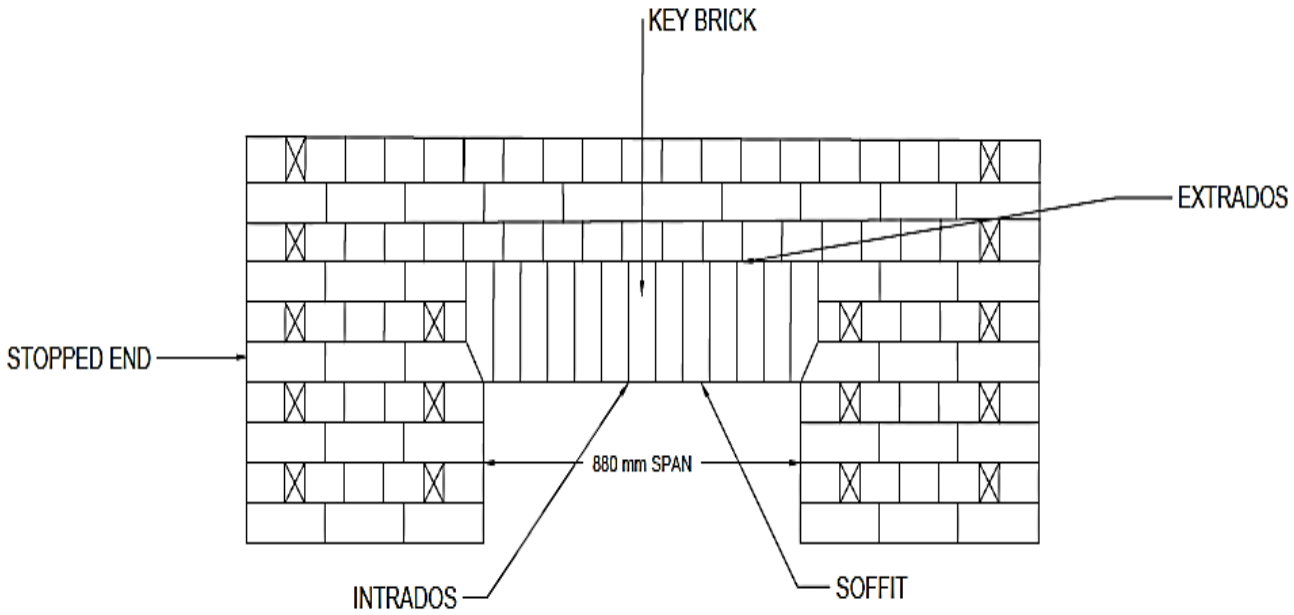

FRONT ELEVATION OF BRICK-ON-END LINTEL
SCALE 1 : 10 **[20]**

RUBRIC FOR QUESTION 5				
PART OF DRAWING	**MARKING CRITERIA**	**POSSIBLE MARK**	**MARKER**	**INTERNAL MODERATOR**
Arch	Correct pattern	3		
	Brick size correct	13		
	Span correct	1		
	Rise correct	1		
	Labelling	1		
	Neatness	2		
Surrounding brickwork	Brick pattern correct	6		
	660 mm on both sides	2		
	Brick sizes correct	6		
	Stopped end	2		
	Neatness	6		
Labelling	Correctness	6		
	Dimension line	1		
	Subtotal	**50**		
	Divide total by 4,16	12		
	Balanced layout and accuracy	6		
	Title	1		
	Scale	1		
	TOTAL:	**20**		

QUESTION 6

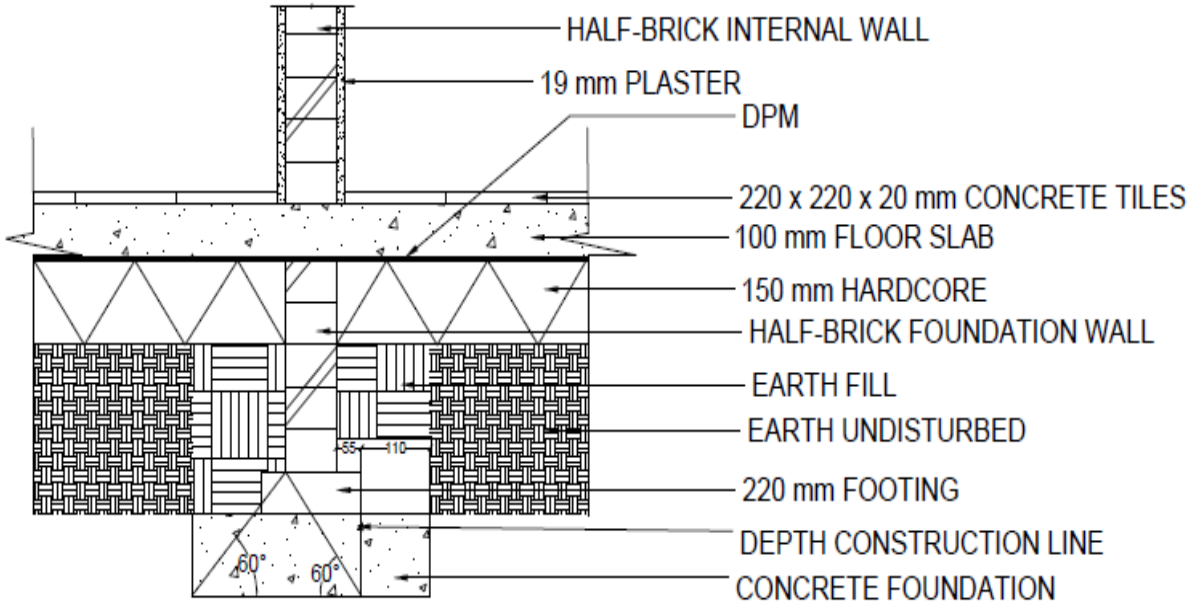

VERTICAL SECTION THROUGH FOUNDATION WALL AND FOOTING
SCALE 1 : 10 **[20]**

RUBRIC FOR QUESTION 6				
PART OF DRAWING	**MARKING CRITERIA**	**POSSIBLE MARK**	**MARKER**	**INTERNAL MODERATOR**
Concrete foundation, foundation wall and footing	Correct position	3		
	Size correct	3		
	Hatching	3		
	Labelling	3		
	Neatness	3		
Internal wall and plasters	Correct position	3 (plaster × 2)		
	Size correct	3 (plaster × 2)		
	Hatching	3 (plaster × 2)		
	Labelling	2		
	Neatness	3 (plaster × 2)		
Hard core, floor and concrete	Correctness position	3		
	Size correct	3		
	Hatching	2		
	Labelling	3		
	Neatness	3		
Ground level, DPM and depth correction line	Correctness	2		
	Size correct	3 (GL × 2)		
	Hatching	4 (earth fill × 2)		
	Labelling	4		
	Neatness	4 (GL × 2)		
	Subtotal	**60**		
	Divide by 3,61	13		
	Balanced layout and accuracy	5		
	Title	1		
	Scale	1		
	TOTAL:	**20**		

TOTAL: 100

Copyright reserved