higher education & training

Department:
Higher Education and Training
REPUBLIC OF SOUTH AFRICA

T160**(E)**(M22)T
APRIL EXAMINATION

NATIONAL CERTIFICATE

BUILDING DRAWING N1

(8090001)

22 March 2016 (Y-Paper)
13:00–17:00

REQUIREMENTS: ONE A2 drawing sheet

Candidates may use drawing instruments.

This question paper consists of 4 pages.

Copyright reserved

DEPARTMENT OF HIGHER EDUCATION AND TRAINING
REPUBLIC OF SOUTH AFRICA

NATIONAL CERTIFICATE
BUILDING DRAWING N1
TIME: 4 HOURS
MARKS: 100

INSTRUCTIONS AND INFORMATION

1. Answer ALL the questions.
2. Read ALL the questions carefully.
3. Number the answers according to the numbering system used in this question paper.
4. Use both sides of the drawing paper.
5. ALL the drawings are to be fully dimensioned and neatly finished off with descriptive titles and notes to conform with the SANS Recommended Practice for Building Drawings.
6. A balanced layout must be maintained.
7. Use your discretion where dimensions are not given.
8. ALL the drawings must be drawn to the required scale.
9. Refer to the mark allocation at the end of each question for the breakdown of answers.
10. ALL work you do not want to be marked must be clearly crossed out.
11. Work neatly.

Copyright reserved

QUESTION 1

Draw, to scale 1 : 1 and in first-angle projection, the orthographic views of the isometric drawing below.

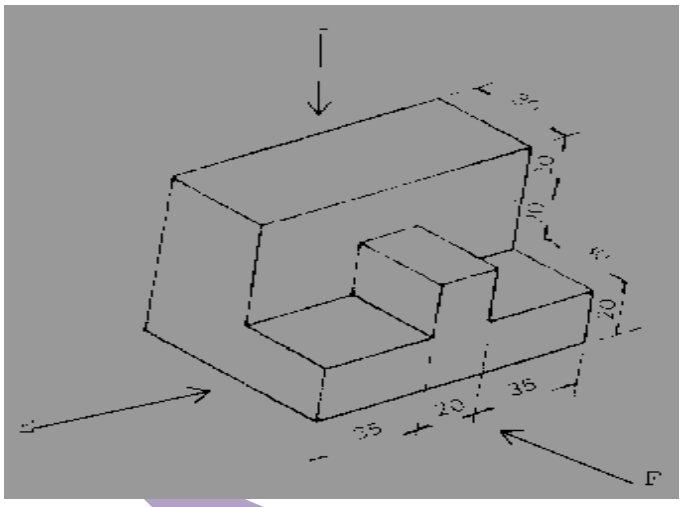

[15]

QUESTION 2

2.1 Draw, to scale 1 : 10, the alternate plan course of a T-junction between TWO half-brick walls. (10)

2.2 Draw, to scale 1 : 10, the alternate plan course of a right-angled corner, ONE brick wide, built in English bond. (10)

[20]

QUESTION 3

Make neat sketches of the sectioning symbols used for each of the following building materials:

- Plaster bricks
- Face bricks
- Concrete
- Ground
- Stone work
- Glass
- Plaster
- Hard-core filling
- Cross-grained wood
- Rough-sawn timber (10 × 2) **[20]**

Copyright reserved

QUESTION 4

A building is to be set out by means of profiles, and the 3 : 4 : 5 method is to be applied.

Make a neat sketch and clearly show the setting-out method at only ONE corner of the building. **[7]**

QUESTION 5

A standard precast concrete lintel is provided for a 2-metre opening in a one-brick wall. Three courses of brick force are provided above the concrete lintel for further strengthening of the brickwork.

Draw, to scale 1 : 10, the following:

- Slightly more than half of the front elevation of the opening
- A vertical section through the top of the opening **[13]**

QUESTION 6

A one-brick wall, plastered on the inside, rests on a 650 mm × 220 mm concrete foundation.

Draw, to scale 1 : 10, a vertical section through the floor and foundation, clearly showing the following:

- Concrete foundation
- Foundation wall
- DPC
- GL
- 22 mm × 75 mm skirting
- Quarter round
- 75 mm concrete floor **[25]**

TOTAL: 100

Copyright reserved