higher education & training

Department:
Higher Education and Training
REPUBLIC OF SOUTH AFRICA

MARKING GUIDELINE

NATIONAL CERTIFICATE

APRIL EXAMINATION

BUILDING DRAWING N1

22 MARCH 2016

This marking guideline consists of 8 pages.

Copyright reserved

QUESTION 1

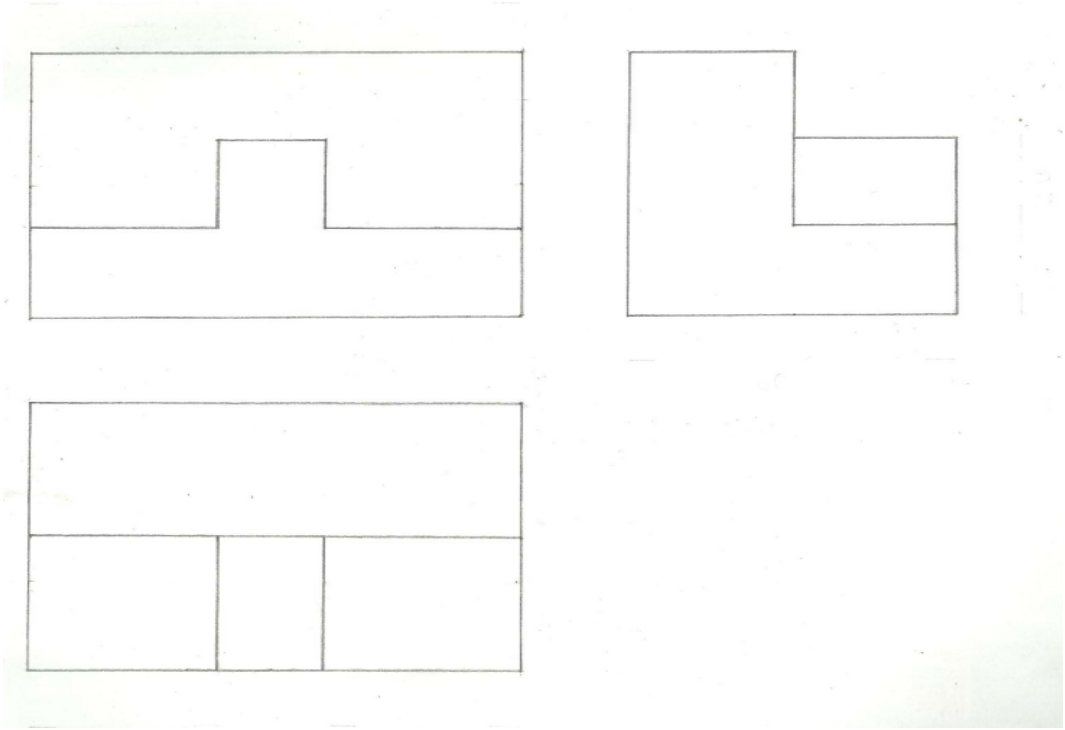

MARKING CRITERIA	POSSIBLE MARK
FRONT VIEW	4
LEFT VIEW	4
TOP VIEW	4
NEATNESS OF LAYOUT	2
SCALE	1
TOTAL MARKS	15

[15]

QUESTION 2

2.1

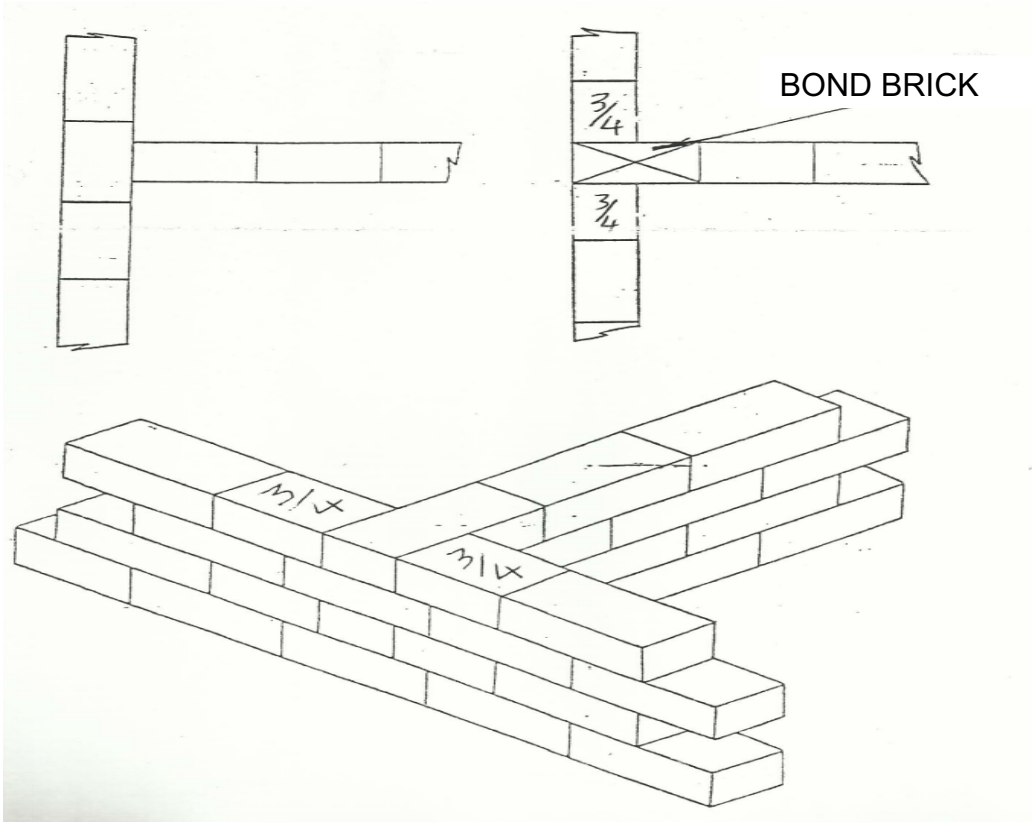

MARKING CRITERIA	POSSIBLE MARK
BRICK PATTERN	3
ACCURACY	2
CORRECTNESS	1
NEATNESS OF LAYOUT	2
LABELS	1
SCALE	1
TOTAL	10

(10)

2.2

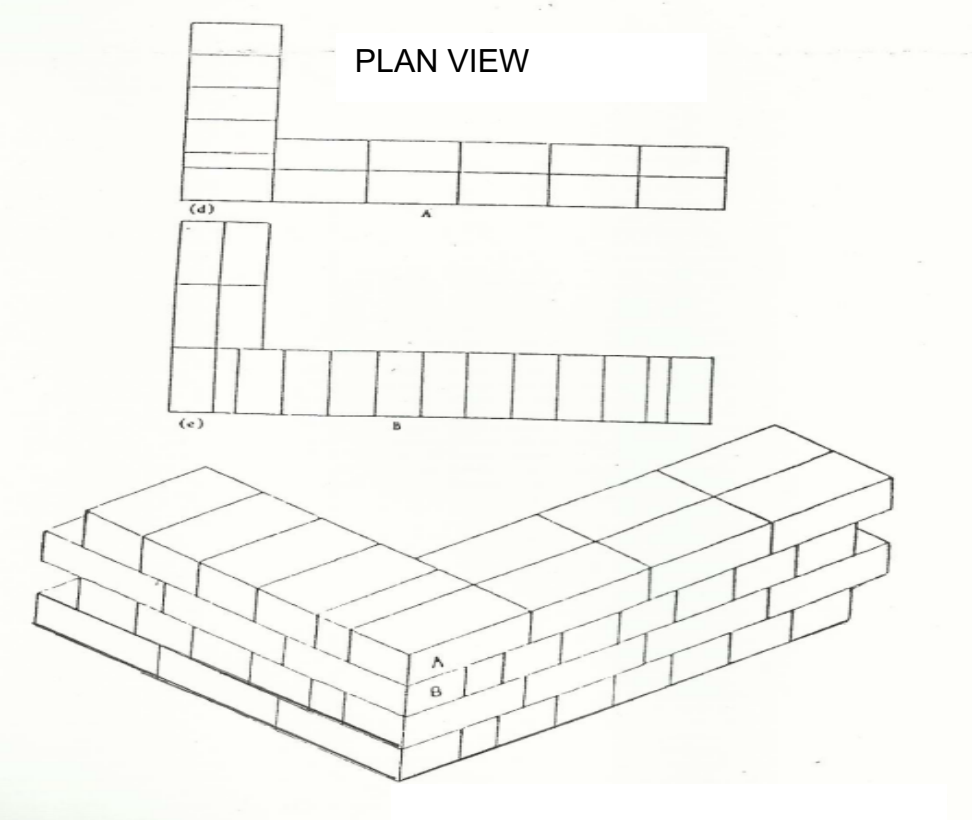

ISOMETRIC VIEW

MARKING CRITERIA	POSSIBLE MARK
BRICK PATTERN	3
ACCURACY	2
CORRECTNESS	2
NEATNESS OF LAYOUT	2
SCALE	1
TOTAL	10

(10)
[20]

QUESTION 3

- PLASTER BRICKS
- FACE BRICKS
- CONCRETE
- GROUND
- STONE WORK
- GLASS
- PLASTER
- HARD CORE FILLING
- CROSS-GRAINED WOOD
- ROUGH-SAWN TIMBER

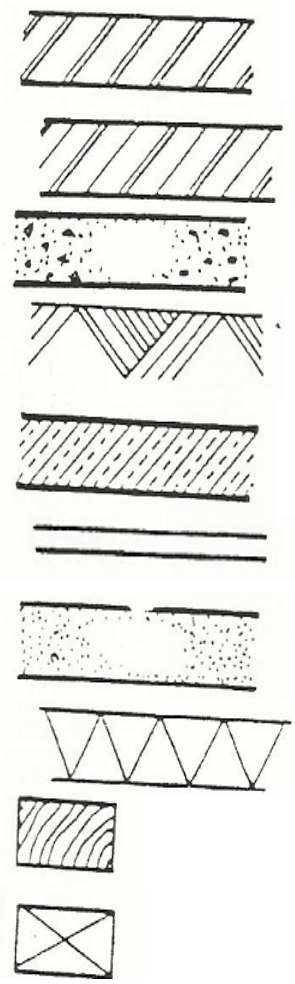

(10 × 2) **[20]**

QUESTION 4

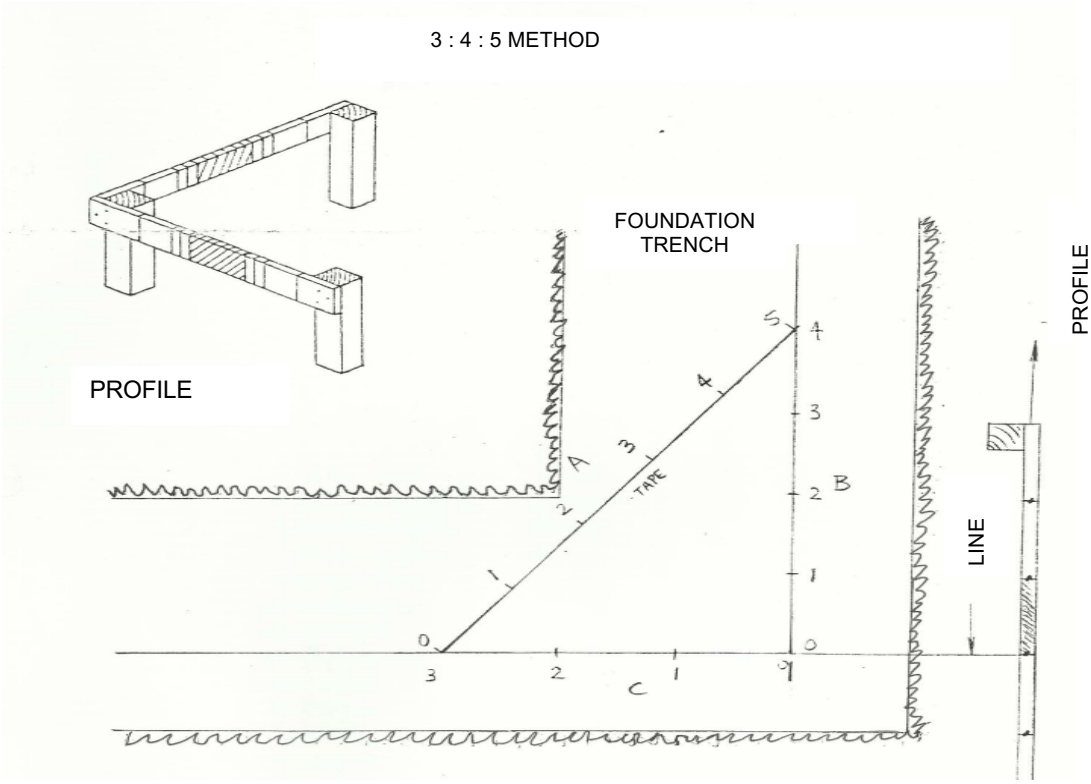

MARKING CRITERIA	POSSIBLE MARK
ACCURACY	2
CORRECTNESS	1
NEATNESS OF LAYOUT	2
LABELS	1
TITLE/SCALE	1
TOTAL	7

[7]

QUESTION 5

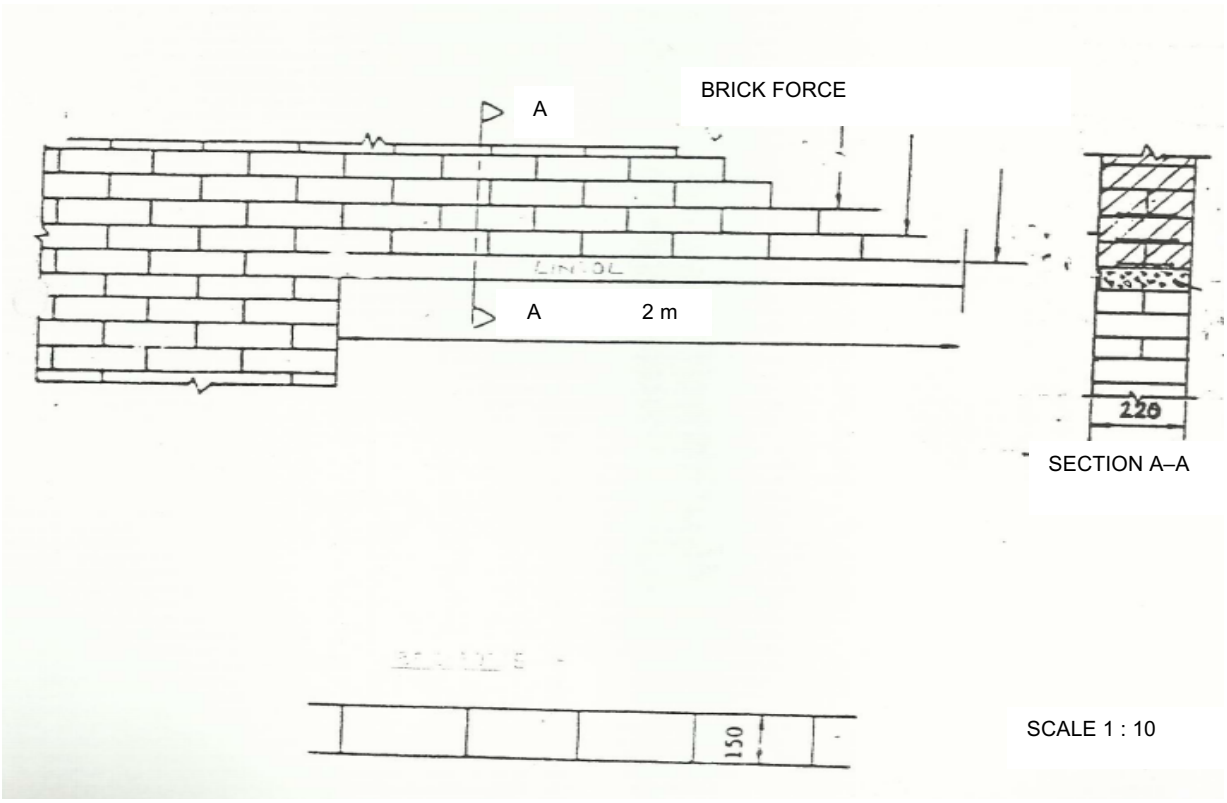

MARKING CRITERIA	POSSIBLE MARK
FRONT VIEW	3
VERTICAL SECTION	2
BRICK PATTERN	2
ACCURACY	2
CORRECTNESS	1
NEATNESS OF LAYOUT	2
SCALE	1
TOTAL	13

[13]

QUESTION 6

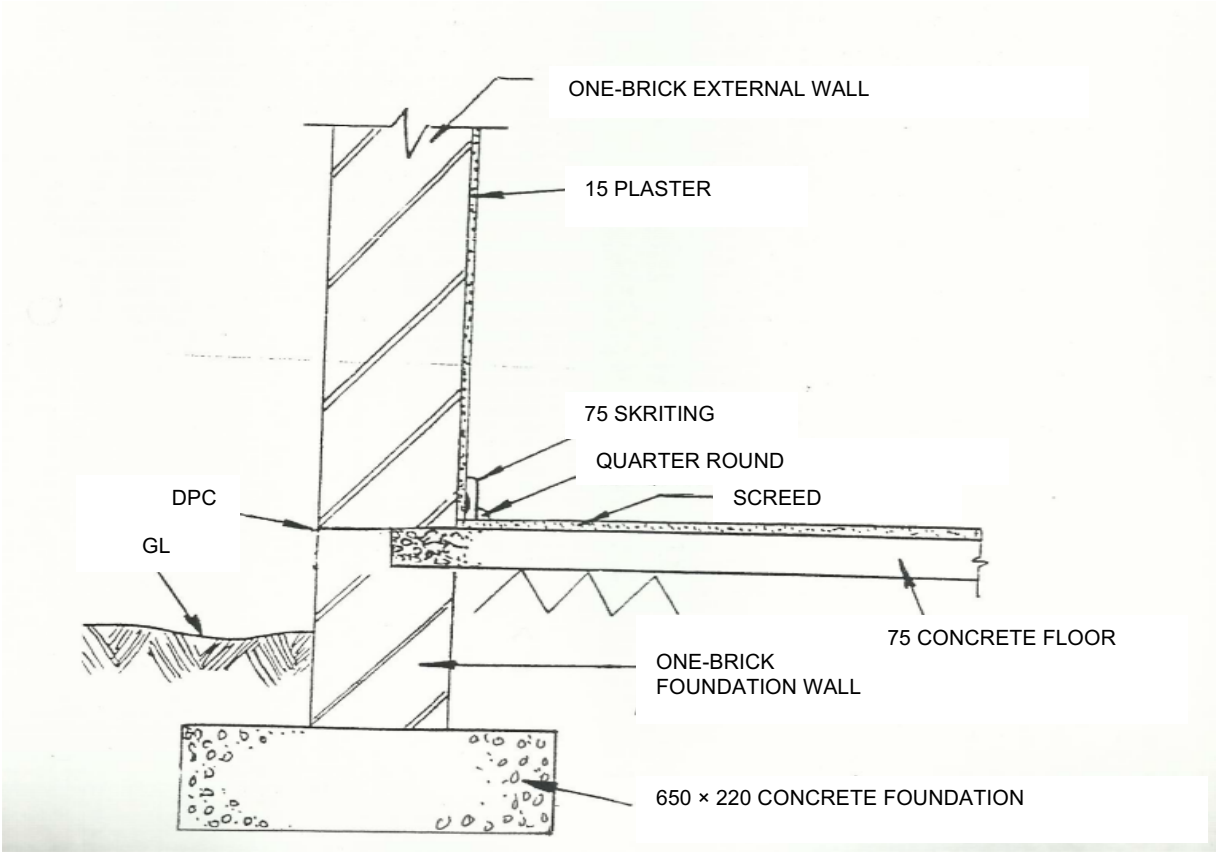

MARKING CRITERIA	POSSIBLE MARK
CONCRETE FOUNDATION	3
FOUNDATION WALL	3
DPC	2
GL	2
22 × 75 SKIRTING	2
QUARTER ROUND	2
75 CONCRETE FLOOR	2
ACCURACY	3
CORRECTNESS	2
NEATNESS OF LAYOUT	2
SCALE	2
TOTAL	25

[25]

TOTAL: 100

Copyright reserved