higher education & training

Department:
Higher Education and Training
REPUBLIC OF SOUTH AFRICA

T170(E)(A9)T
**APRIL EXAMINATION**

**NATIONAL CERTIFICATE**

# BUILDING DRAWING N1

(8090001)

**9 April 2015 (Y-Paper)**
**13:00–17:00**

**CLOSED-BOOK EXAMINATION**

**This question paper consists of 4 pages and 1 diagram sheet.**

ENGINEERING

Copyright reserved 

# DEPARTMENT OF HIGHER EDUCATION AND TRAINING
# REPUBLIC OF SOUTH AFRICA

NATIONAL CERTIFICATE
BUILDING DRAWING N1
TIME: 4 HOURS
MARKS: 100

---

NOTE: In order to score the maximum marks within the question paper, candidates should answer all the questions. All work you do not want to be marked must be clearly crossed out.

**INSTRUCTIONS AND INFORMATION**

1. Answer ALL the questions.
2. Read ALL the questions carefully.
3. Number the answers according to the numbering system used in this question paper.
4. Marks will be allocated for neat work that is well set out and organised.
5. Marks will also be allocated for line quality and labelling of drawings.
6. Write neatly and legibly.

---

ENGINEERING

Copyright reserved 

## QUESTION 1

Draw the orthographic views of the attached sheet FIGURE 1. **[16]**

## QUESTION 2

Draw four rectangles 750 mm × 500 mm evenly spaced showing the following hatching symbols in the rectangles.

Earth undisturbed
Planed timber
Plywood
Fibre board

SCALE 1 : 10 **[16]**

NOTE: Arrange the rectangles neatly and allow a space of 25 mm between the rectangles.

## QUESTION 3

Draw an isometric view of a king closer.

NOTE: Your preferred view may be illustrated.
Do NOT show any hidden detail.

SCALE 1 : 2 **[12]**

## QUESTION 4

Draw the following common types of roof trusses used in building.

NOTE: Make use of single line diagrams.
The span of the trusses are 6 meter.
Do NOT show roof covering

SCALE 1 : 100

4.1 Lean to truss (6)

4.2 Closed couple roof (6)

4.3 South African roof truss (8)

4.4 W or Fink roof truss (Trussed-type) (8)
**[28]**

ENGINEERING

Copyright reserved 

## QUESTION 5

Draw the front elevation of a one brick wall in stretcher bond six course high. The bottom course must be seven bricks long.

Show a stopped end on the left and a raking back on the right side.

SCALE 1 : 10 **[8]**

## QUESTION 6

Draw a vertical cross section through a suspended wooden floor which is supported by a half brick sleeper wall and a half brick honey comb wall.

Show the following details:

700 mm × 300 mm concrete foundation

Half brick sleeper wall

Half brick honey comb wall

One brick external foundation wall built in face brick.

114 mm × 76 mm wall plate × 2

100 mm surface bed concrete supported on the foundation.

250 mm × 50 mm floor joints

Ant guard

100 mm × 22 mm tongue and groove floor boarding.

Damp proof course.

22 mm x 75 mm skirting.

19 mm Internal plaster

150 mm hard core

Ground level

SCALE 1 : 10 **[20]**

**TOTAL: 100**

ENGINEERING

Copyright reserved

## DIAGRAM SHEET

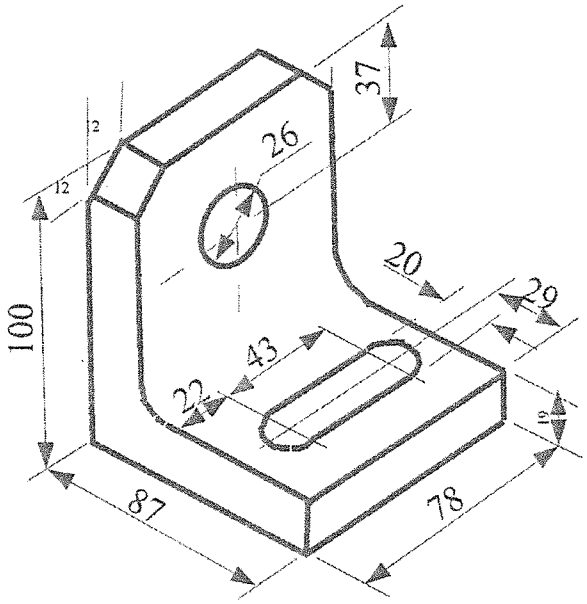


**FIGURE 1**

**SCALE 1 : 1**

ENGINEERING

Copyright reserved

higher education & training

Department:
Higher Education and Training
REPUBLIC OF SOUTH AFRICA

# MARKING GUIDELINE

## NATIONAL CERTIFICATE

## BACKUP EXAMINATION

## BUILDING DRAWING N1

## BACKUP 2015

**This marking guideline consists of 16 pages.**

Copyright reserved

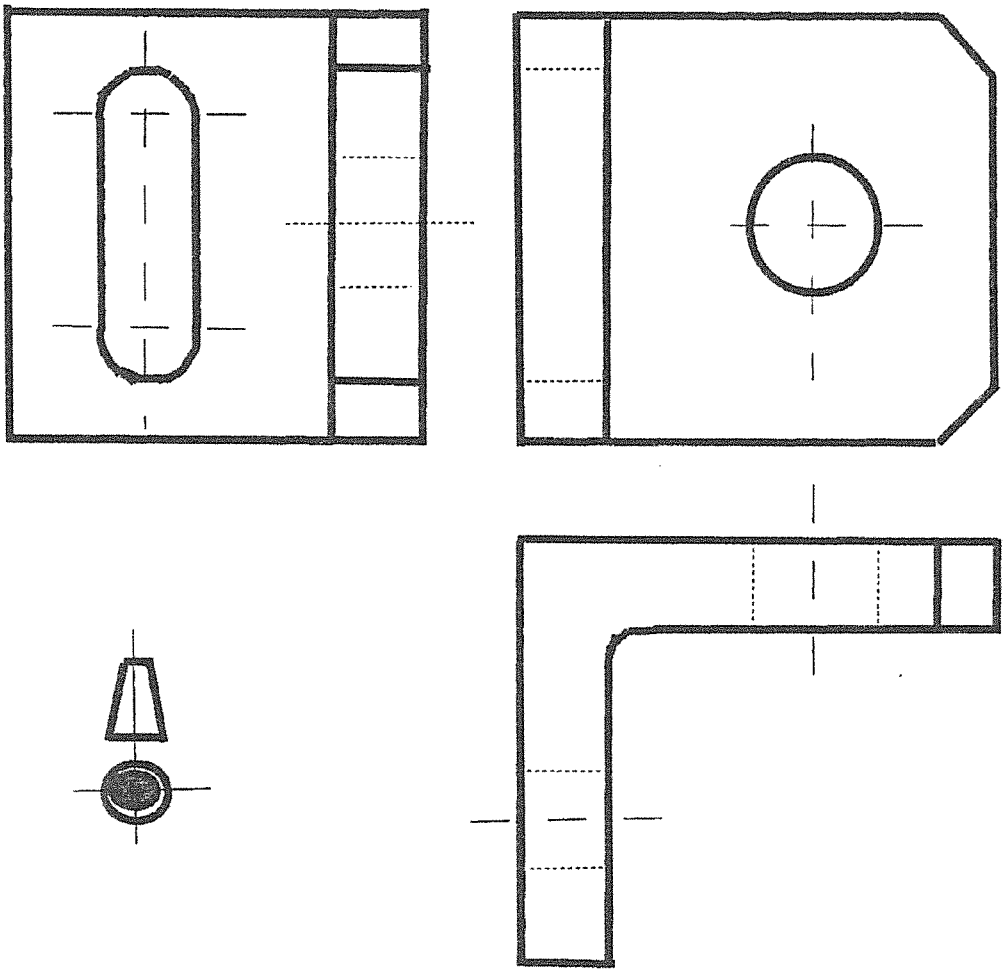

**FIGURE 1**

Copyright reserved 

| QUESTION 1 FIGURE 1 DIAGRAMSHEET | | | |
|---|---|---|---|
| MARKING CRITERIA | POSSIBLE MARK | MARKER MARK | MOD MARK |
| CORRECT POSITION | 6 | | |
| SIZE CORRECT | 5 | | |
| LINEWORK | 2 | | |
| NEATNESS LAYOUT | 1 | | |
| TITLE SCALE | 2 | | |
| TOTAL | 16 | | |
| | | | |
| | | | |

Copyright reserved

| QUESTION 2 EARTH UNDISTURBED | | | |
|---|---|---|---|
| CORRECTNESS | 1 | | |
| ACCURACY | 1 | | |
| NEATNESS | 1 | | |
| TITLE / SCALE | 1 | | |
| | | | |
| | | | |

| QUESTION 2 PLANED TIMBER | | | |
|---|---|---|---|
| CORRECTNESS | 1 | | |
| ACCURACY | 1 | | |
| NEATNESS | 1 | | |
| TITLE / SCALE | 1 | | |
| | | | |
| | | | |

| QUESTION 2 PLYWOOD | | | |
|---|---|---|---|
| CORRECTNESS | 1 | | |
| ACCURACY | 1 | | |
| NEATNESS | 1 | | |
| TITLE / SCALE | 1 | | |
| | | | |
| | | | |

| QUETION 2 FIBRE BOARD | | | |
|---|---|---|---|
| CORRECTNESS | 1 | | |
| ACCURACY | 1 | | |
| NEATNESS | 1 | | |
| TITLE / SCALE | 1 | | |
| | | | |
| TOTAL MARKS | 16 | | |

Copyright reserved

## QUESTION 2

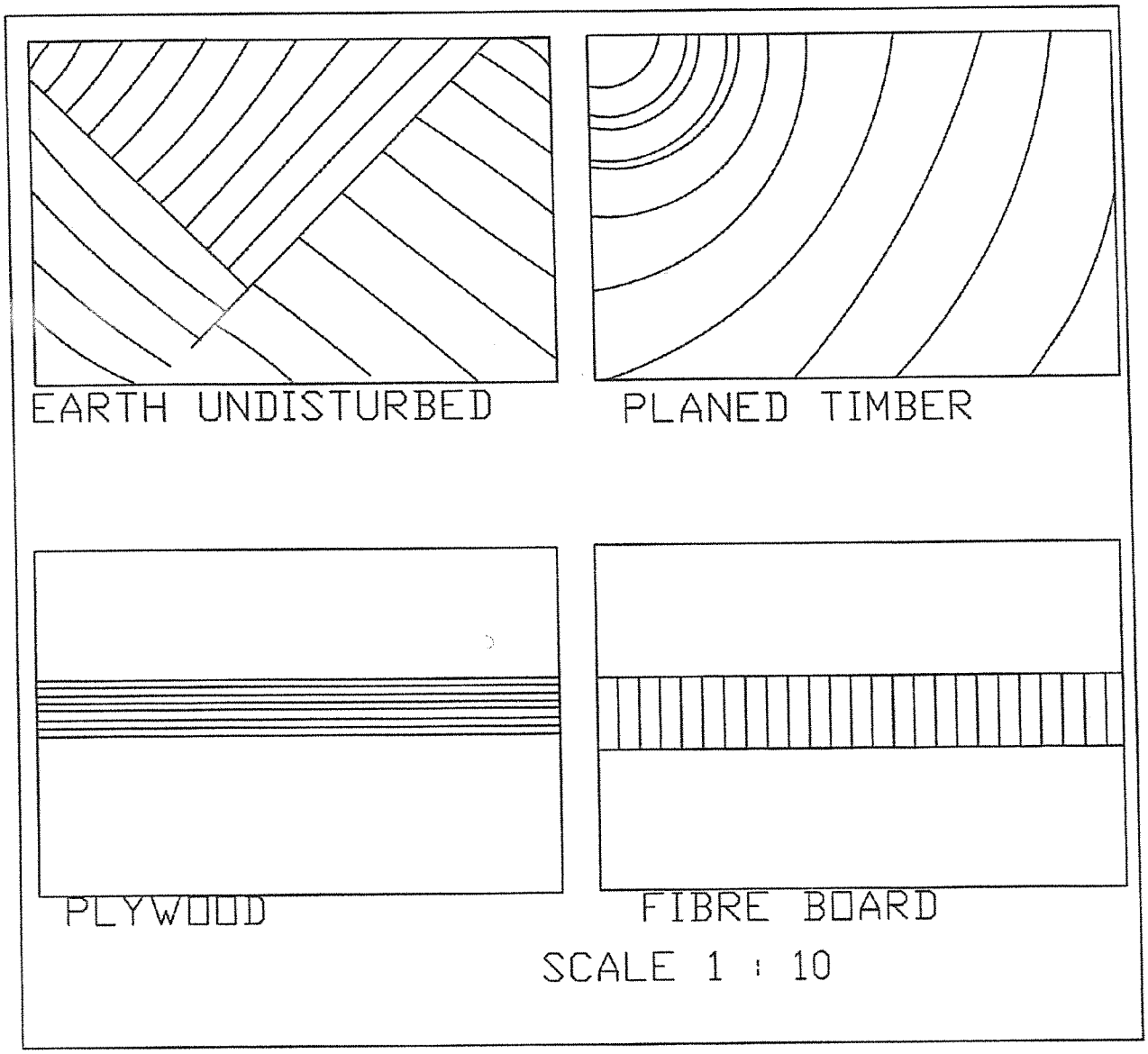
EARTH UNDISTURBED
PLANED TIMBER
PLYWOOD
FIBRE BOARD
SCALE 1 : 10

## QUESTION 3

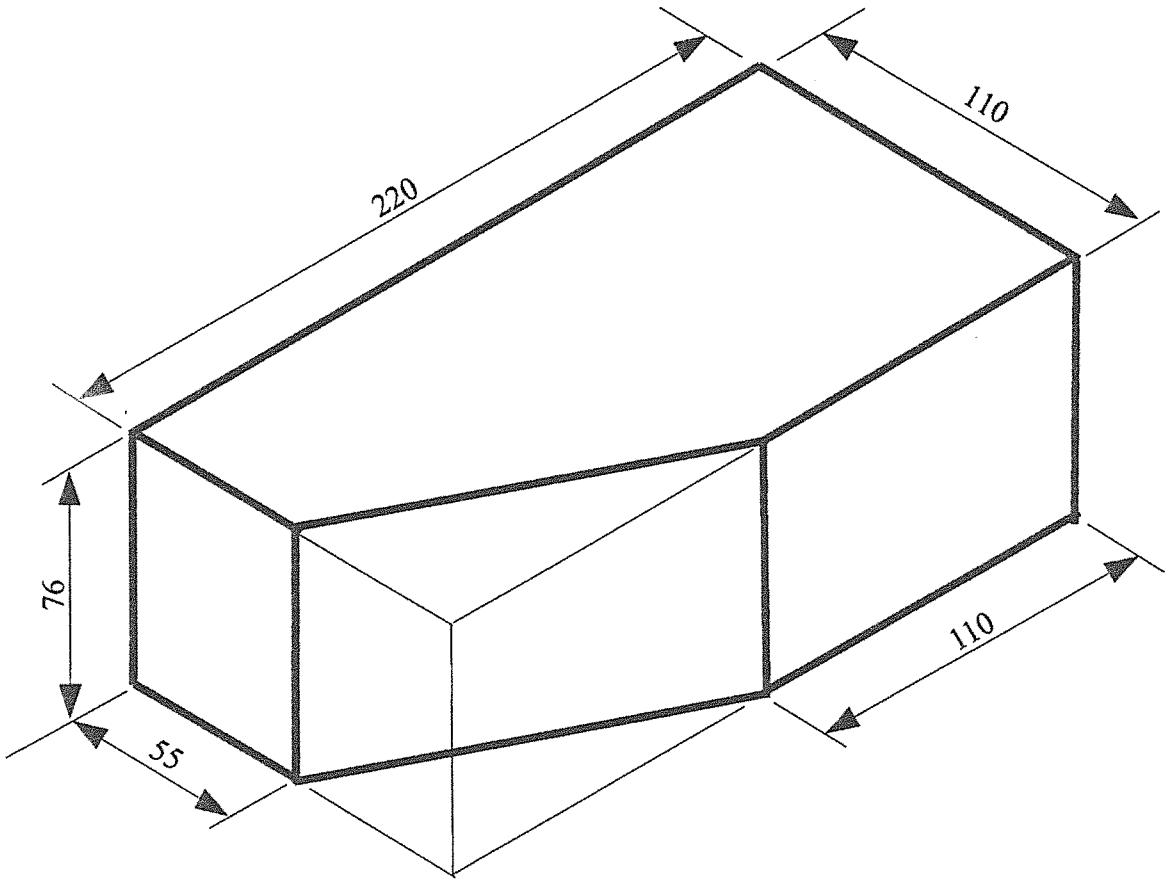


ISOMETRIC VIEW OF A KING CLOSER
SCALE 1 : 2

Copyright reserved

| QUESTION 3<br>ISOMETRIC VIEW OF A KING CLOSER | | | |
|---|---|---|---|
| MARKING CRITERIA | POSSIBLE MARK | MARKER MARK | MOD MARK |
| AXIS | 2 | | |
| CORRECTNESS | 4 | | |
| ACCURACY | 3 | | |
| LINEWORK/NEATNESS | 2 | | |
| TITLE/SCALE | 1 | | |
| TOTAL MARKS | 12 | | |

Copyright reserved

## QUESTION 4

4.3

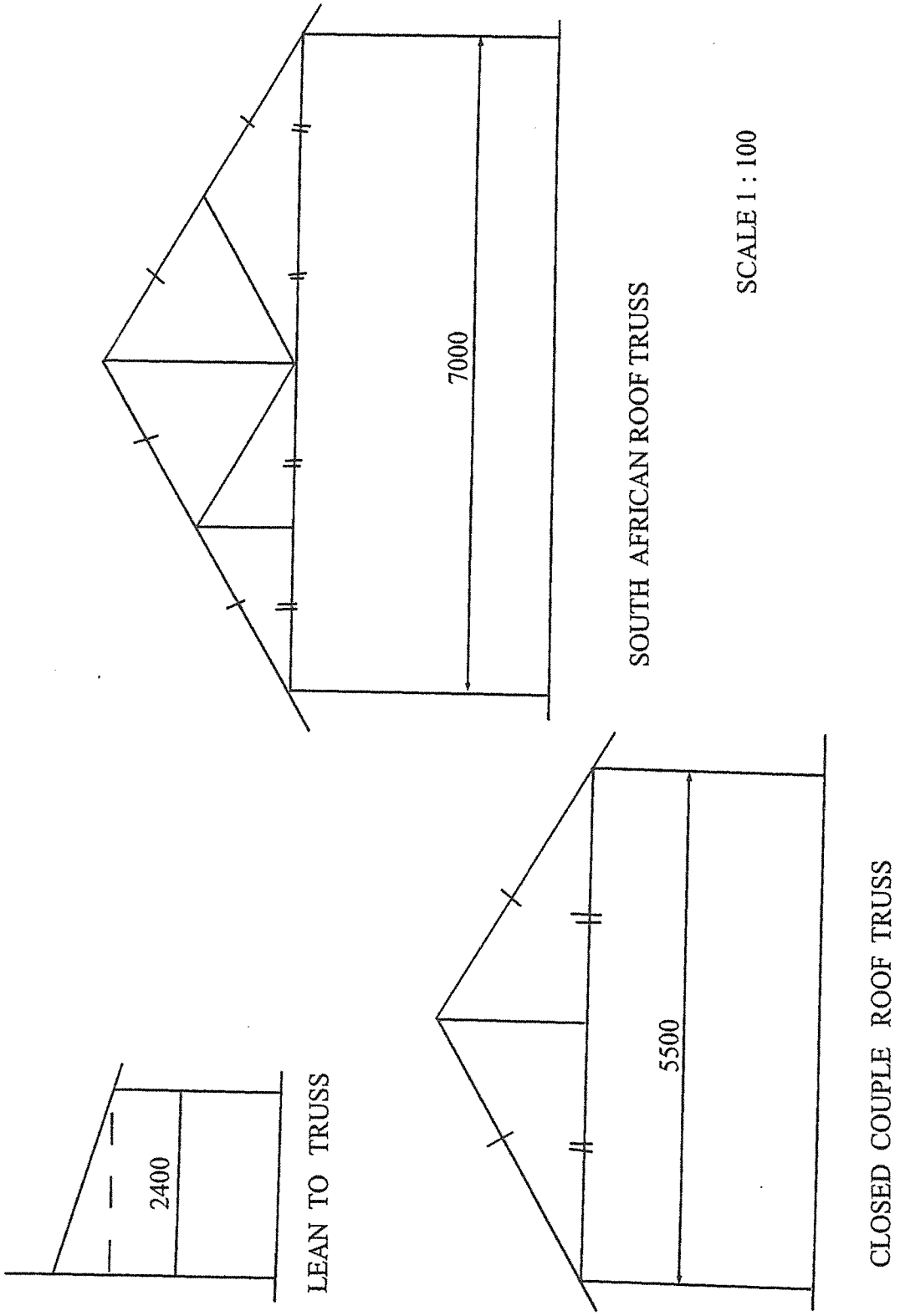


Copyright reserved 

4.4

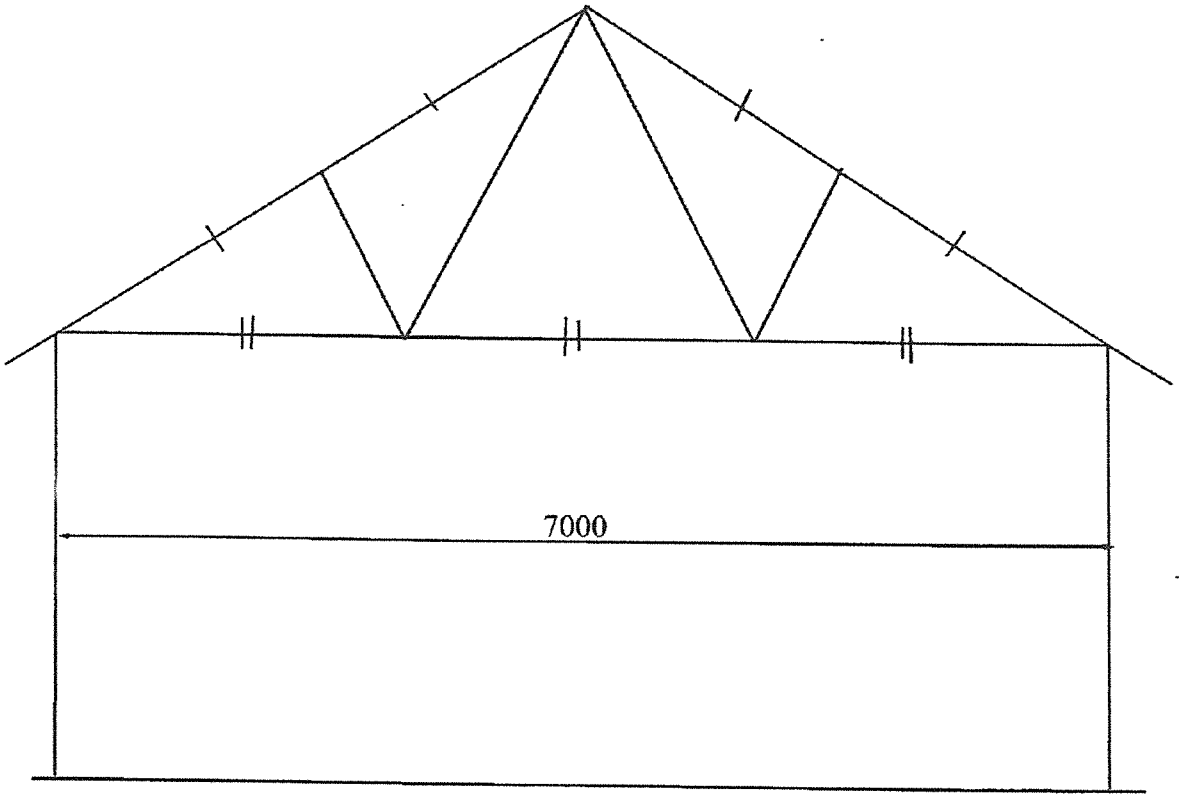


W OR FINK ROOF TRUSS SCALE 1 : 100

Copyright reserved

| QUESTION 4.1 LEAN TO TRUSS | | | |
|---|---|---|---|
| MARKING CRITERIA | POSSIBLE MARK | MARKERS MARK | MOD MARK |
| ACCURACY | 2 | | |
| CORRECTNESS | 2 | | |
| LAYOUT NEATNESS | 1 | | |
| TITLE SCALE | 1 | | |
| TOTAL | 6 | | |

| QUESTION 4.2 CLOSED COUPLE ROOF | | | |
|---|---|---|---|
| MARKING CRITERIA | POSSIBLE MARK | MARKERS MARK | MOD MARK |
| ACCURACY | 2 | | |
| CORRECTNESS | 2 | | |
| LAYOUT NEATNESS | 1 | | |
| TITLE SCALE | 1 | | |
| TOTAL | 6 | | |

Copyright reserved 

| QUESTION 4.3 SOUTH AFRICAN ROOF TRUSS | | | |
|---|---|---|---|
| MARKING CRITERIA | POSSIBLE MARK | MARKERS MARK | MOD MARK |
| ACCURACY | 3 | | |
| CORRECTNESS | 2 | | |
| LAYOUT NEATNESS | 2 | | |
| TITLE SCALE | 1 | | |
| TOTAL | 8 | | |

| QUESTION 4.4 W- ROOF TRUSS | | | |
|---|---|---|---|
| MARKING CRITERIA | POSSIBLE MARK | MARKERS MARK | MOD MARK |
| ACCURACY | 3 | | |
| CORRECTNESS | 2 | | |
| LAYOUT NEATNESS | 2 | | |
| TITLE SCALE | 1 | | |
| TOTAL | 8 | | |

Copyright reserved

**QUESTION 5**

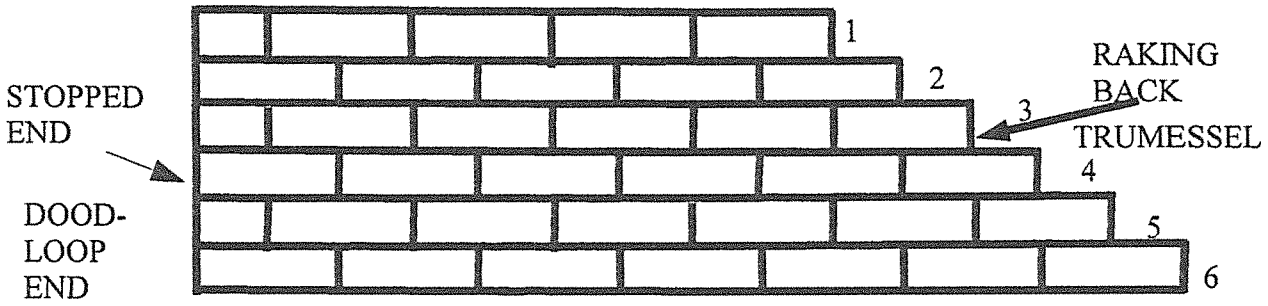


THE FRONT ELEVATION OF A WALL BUILT IN STRETCHER BOND

SCALE 1 : 10

Copyright reserved 

| QUESTION 5 | | | |
|---|---|---|---|
| FRONT VIEW | ONE BRICKWALL | STRETCHER BOND | |
| MARKING CRITERIA | POSSIBLE MARK | MARKERS MARK | MOD MARK |
| ACCURACY | 2 | | |
| CORRECTNESS | 1 | | |
| SETTING OUT NEATNESS | 2 | | |
| LABELS | 2 | | |
| TITLE SCALE | 1 | | |
| TOTAL | 8 | | |

| | | | |
|---|---|---|---|
| | | | |
| | | | |

Copyright reserved

## QUESTION 6

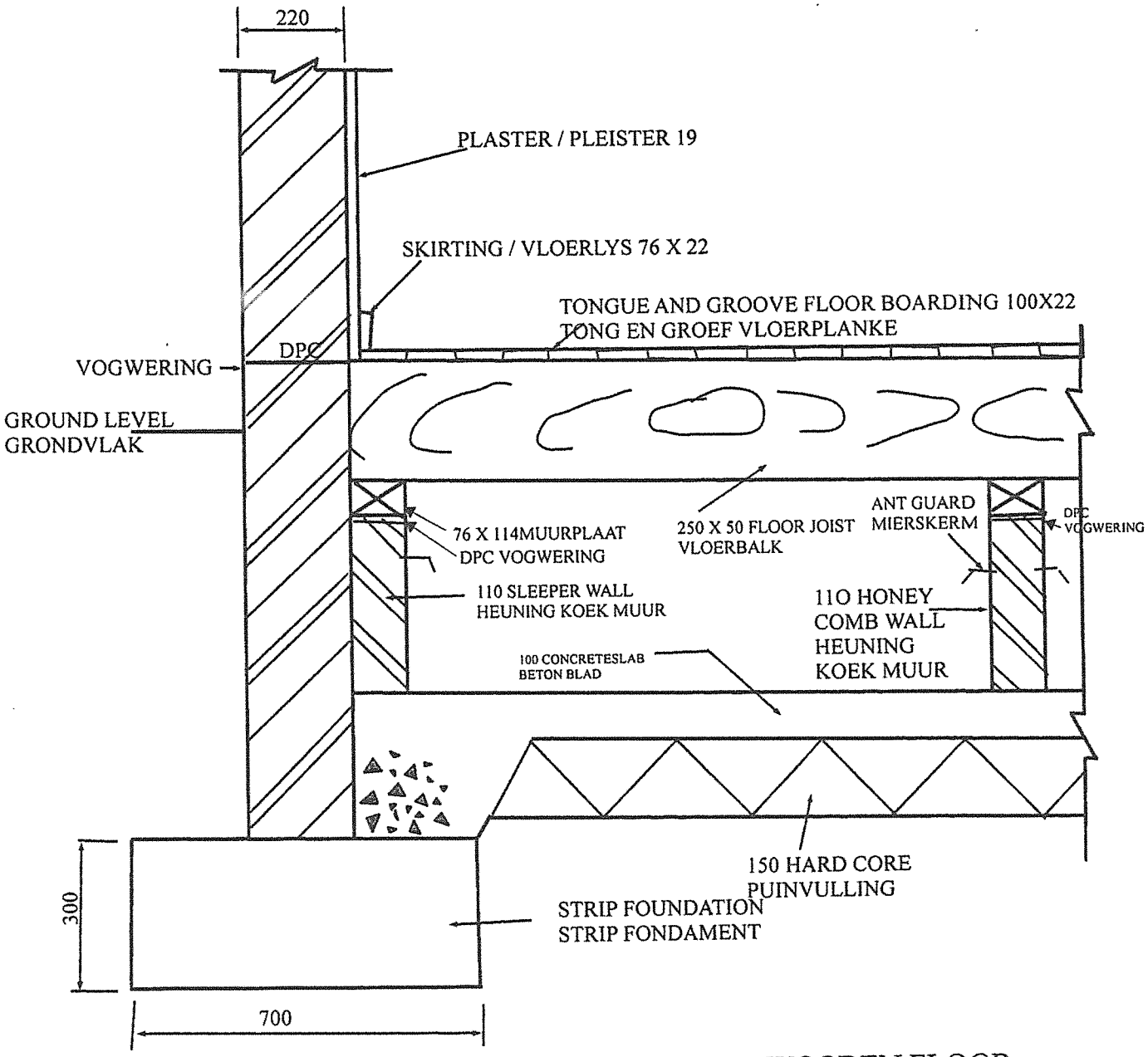


VERTICAL CROSS-SECTION THRU' A SUSPENDED WOODEN FLOOR WITH HALF BRICK SLEEPER WALL AND HONEY-COMB CONSTRUCTION

SCALE 1 : 10

Copyright reserved 

| QUESTION 6 SECTION THROUGH A SUSPENDED WOODEN FLOOR , SUPPORTED BY A HALF BRICK SLEEPER WALL | | | |
|---|---|---|---|
| PART OF THE DRAWING | MARKING CRITERIA | POSSIBLE MARK | REMARKS |
| WALL,PLASTER AND DPC | CORRECT POSITION NEATNESS | 2 | |
| FOUNDATION | CORRECT POSITION LABEL NEAT | 2 | |
| HARDCORE GROUND LEVEL | CORRECT POSITION LABEL NEAT | 2 | |
| SUSPENDED WOODEN FLOOR,WALL PLATE,JOIST FLOOR BOARDS | CORRECT POSITION SHAPE LABEL NEATNESS | 8 | |
| SLEEPER WALL HONEYCOMB WALL | CORRECT POSITION SHAPE LABEL NEAT | 2 | |
| TOTAL | | 16 | |
| OVERALL IMPRESSION | | 2 | |
| TITLE | SCALE | 2 | |
| GRAND | TOTAL | 20 | |

Copyright reserved