higher education & training

Department:
Higher Education and Training
REPUBLIC OF SOUTH AFRICA

T150(E)(A3)T
APRIL EXAMINATION

NATIONAL CERTIFICATE

BUILDING DRAWING N1

(8090001)

3 April 2014 (Y-Paper)
13:00–17:00

This question paper consists of 4 pages and 1 diagram sheet.

ENGINEERING

Copyright reserved

DEPARTMENT OF HIGHER EDUCATION AND TRAINING
REPUBLIC OF SOUTH AFRICA

NATIONAL CERTIFICATE
BUILDING DRAWING N1
TIME: 4 HOURS
MARKS: 100

INSTRUCTIONS AND INFORMATION

1. Answer ALL the questions.
2. Read ALL the questions carefully.
3. Number the answers according to the numbering system used in this question paper.
4. Marks will be allocated for neat work that is organised and well set out.
5. Marks will also be allocated for line quality and labelling of drawings.
6. Write neatly and legibly.

ENGINEERING

Copyright reserved

QUESTION 1

Draw FOUR rectangles, 750 mm x 500 mm, evenly spaced showing the following hatching symbols in the rectangles:

Concrete (4)

Compacted hard core (4)

Unplaned timber (4)

Stonework (4)

SCALE 1 : 10

NOTE: Arrange the rectangles neatly and allow a space of 25 mm between them. **[16]**

QUESTION 2

Draw an isometric view of a three-quarter bat.

Note : Your preferred view may be illustrated.
Do not show any hidden details.

SCALE 1 : 2 **[12]**

QUESTION 3

Draw the orthographic views of FIGURE 1 (attached DIAGRAM SHEET).

SCALE 1 : 1 **[16]**

QUESTION 4

Draw the front elevation of a one-brick wall in English bond six courses high.
The bottom course must be seven bricks long. Show a stopped end on the left and a raking back on the right side.

SCALE 1 : 10 **[8]**

ENGINEERING

Copyright reserved

QUESTION 5

Draw a horizontal cross section of a wooden window frame built into a one-brick external wall. The wall is plastered internally The window has no casements. The overall size of the frame is 650 mm x 850 mm high.

The individual members have the following characteristics:

Top rail	80 mm x 40 mm
Bottom rail	80 mm x 40 mm
Side rail	80 mm x 40 mm
Beading	20 mm x 20 mm
Rebates	20 mm x 40 mm
Glass	3 mm

SCALE 1 : 5

NOTE: Show the DPC **[16]**

QUESTION 6

Draw an elliptical gauged arch. The span is 1 200 mm and the rise is 400 mm.

SCALE 1 : 10

NOTE: Show the key brick.
Do not show any adjacent brickwork. **[16]**

QUESTION 7

Draw a vertical cross section through an internal half-brick wall of a dwelling.
Show the following details on your drawing:

Substructure

200 mm x 400 mm strip foundation

75 mm concrete floor

150 mm hard core

DPC

Half-brick internal wall 110 mm

Scale 1 : 10 **[16]**

TOTAL: 100

Copyright reserved

ENGINEERING

DIAGRAM SHEET

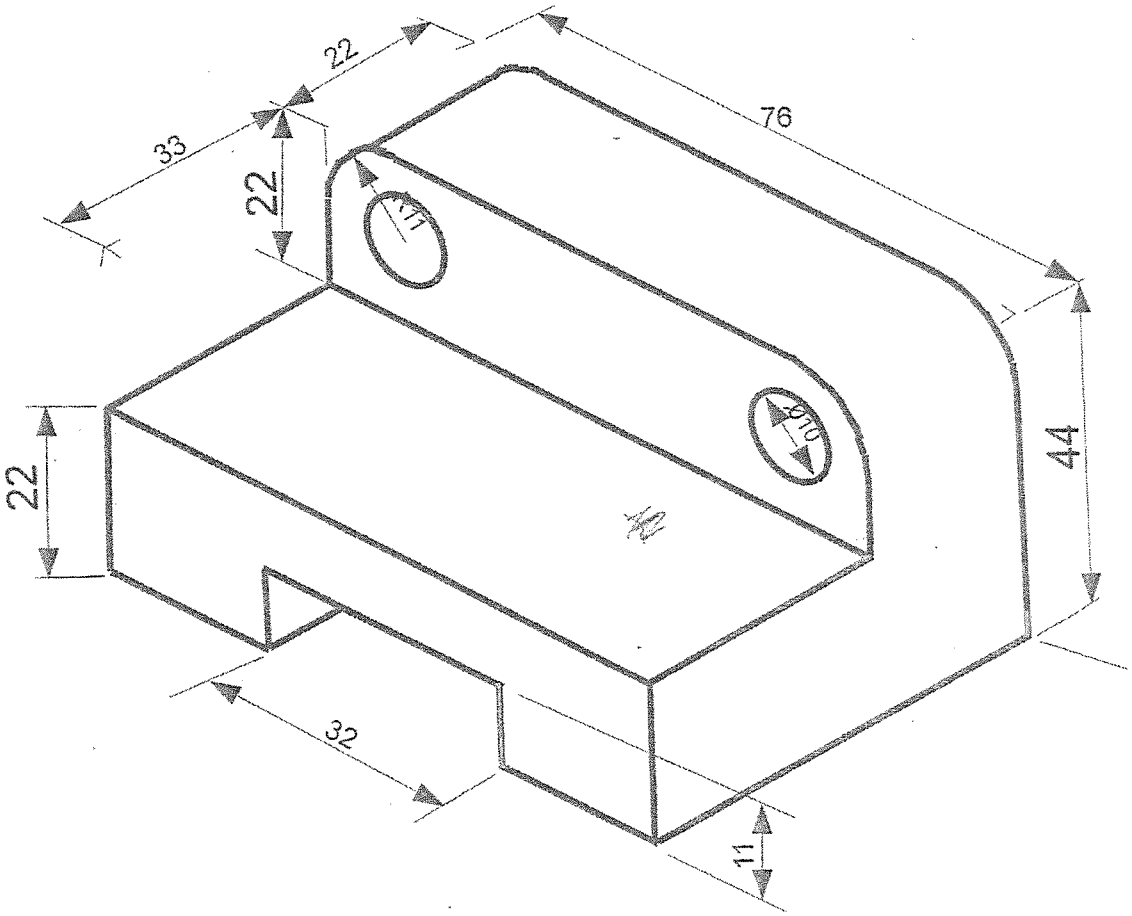

FIGURE 1

Copyright reserved

higher education & training

Department:
Higher Education and Training
REPUBLIC OF SOUTH AFRICA

MARKING GUIDELINE

NATIONAL CERTIFICATE

APRIL EXAMINATION

BUILDING DRAWING N1

3 APRIL 2014

This marking guideline consists of 9 pages.

Copyright reserved

QUESTION 1

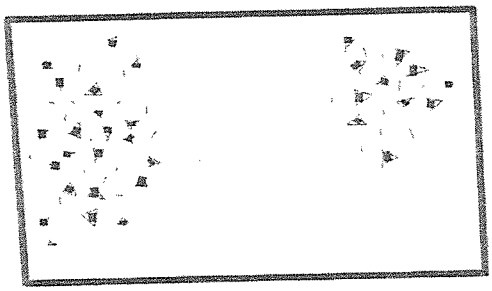

CONCRETE

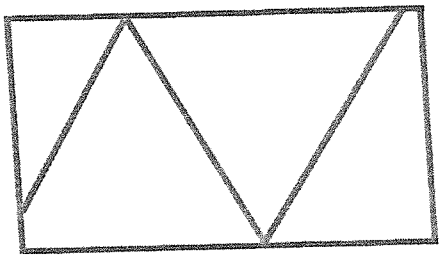

COMPACTED HARDCORE

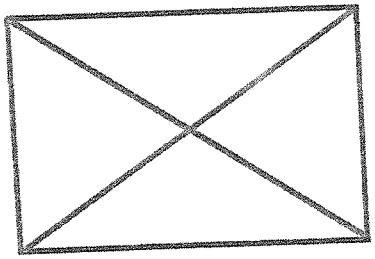

UNPLANED TIMBER

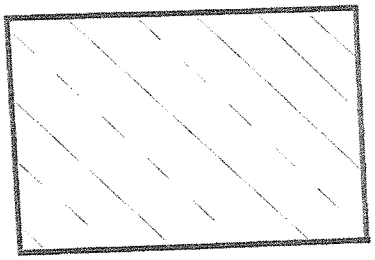

STONEWORK

FOUR HATCHING SYMBOLS
SCALE 1 : 10 **[16]**

Copyright reserved

QUESTION 2

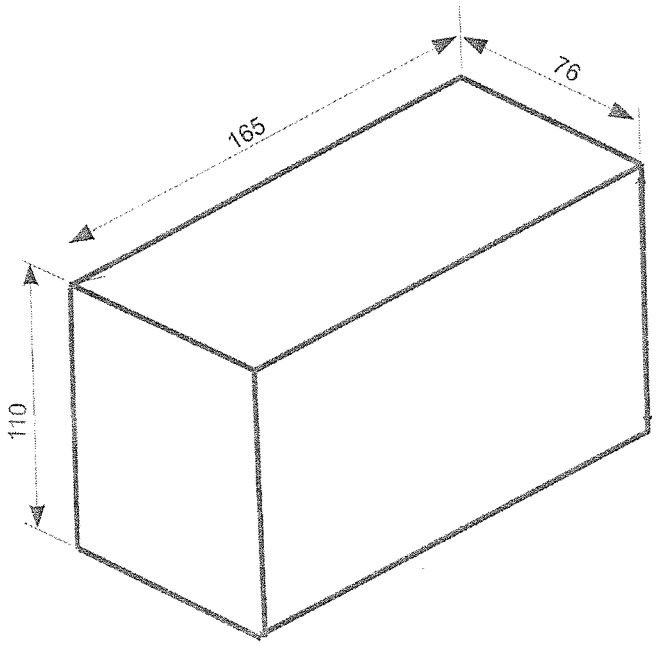

ISOMETRIC VIEW -3/4 BAT
SCALE 1 : 2 **[12]**

Copyright reserved

QUESTION 3

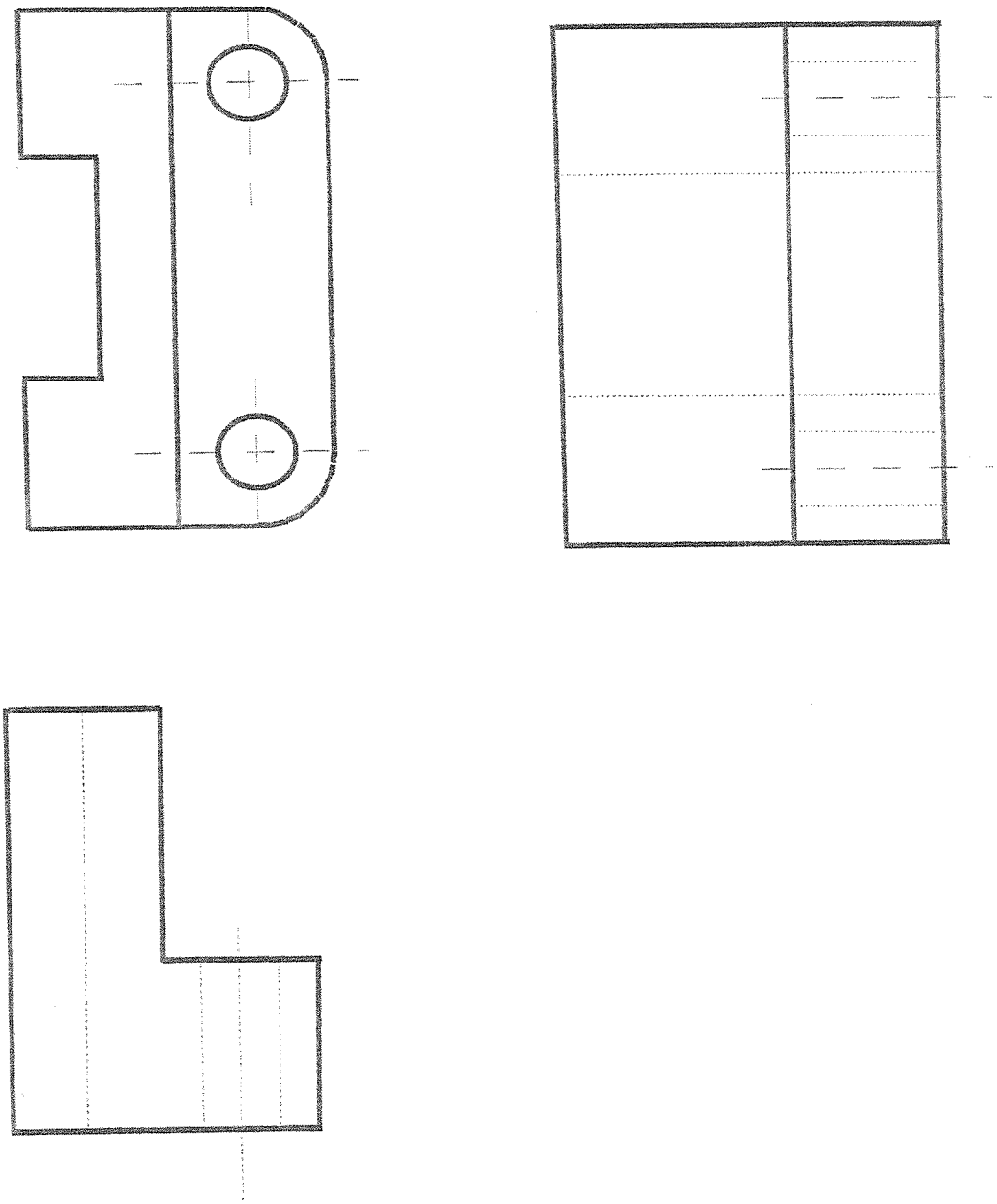

SCALE 1 : 1 **[16]**

Copyright reserved

QUESTION 4

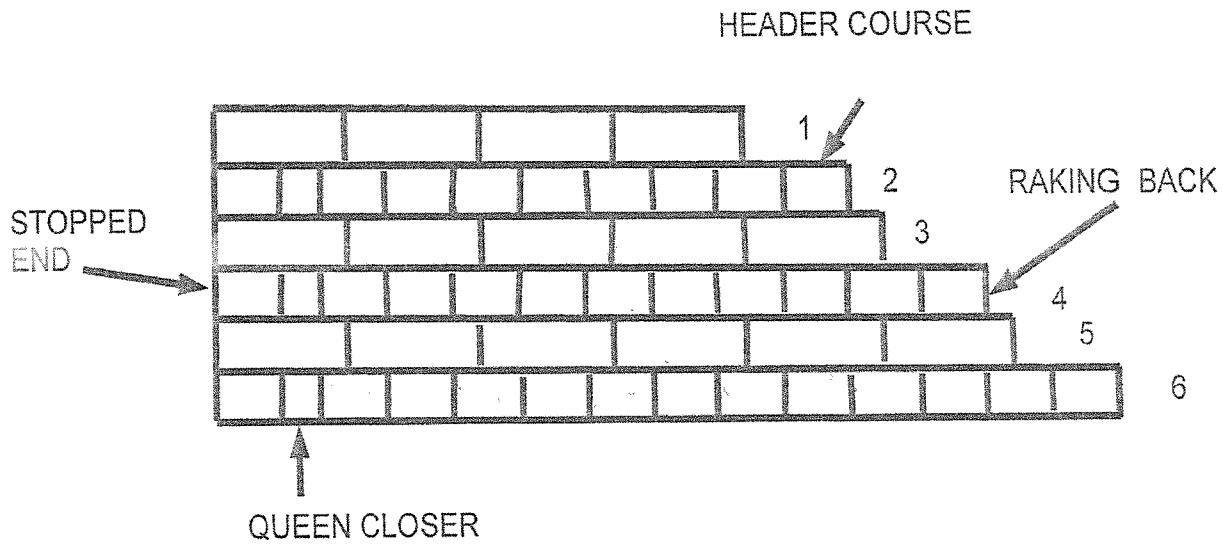

FRONT ELEVATION OF WALL BUILT IN ENGLIGH BOND INCLUDING A STOPPED END AND RAKING BACK
SCALE 1 : 10 **[8]**

QUESTION 5

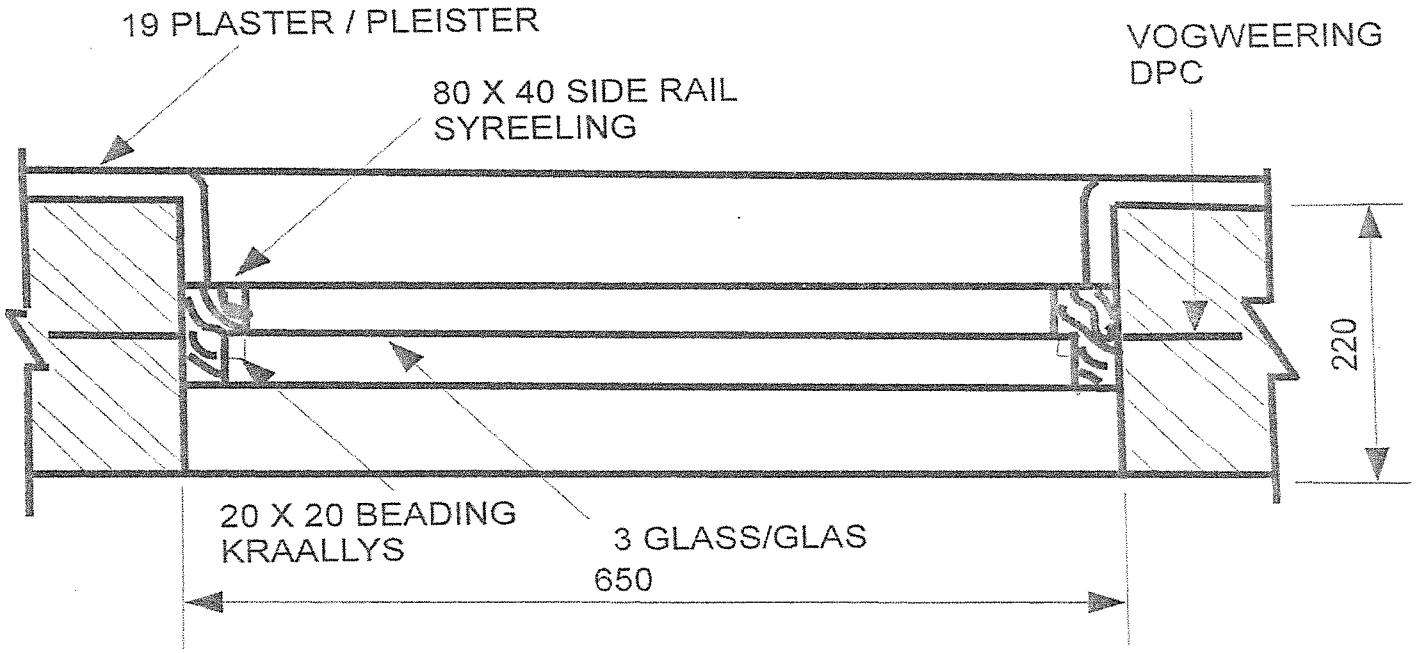

HORIZONTAL CROSS SECTION THROUGH WOODEN WINDOW WITHOUT CASEMENTS

SCALE 1 : 5 **[16]**

QUESTION 6

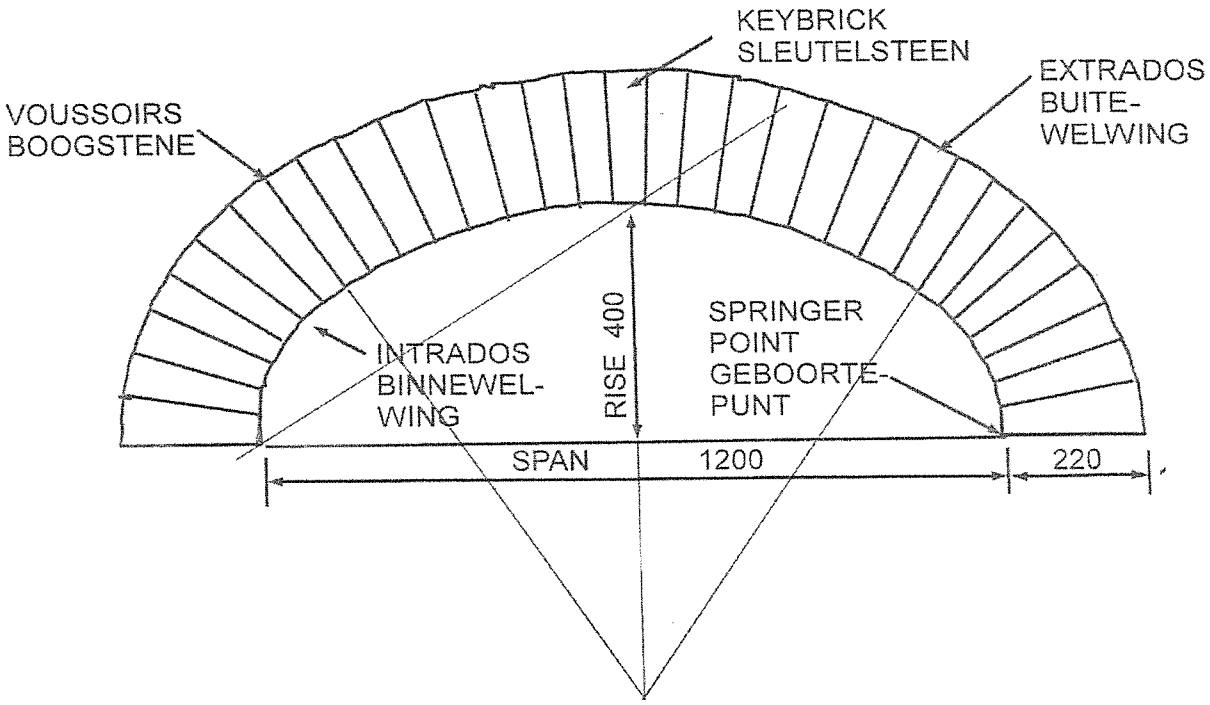

AN ELLIPTICAL GAUGED ARCH
SCALE 1 : 10 **[16]**

QUESTION 7

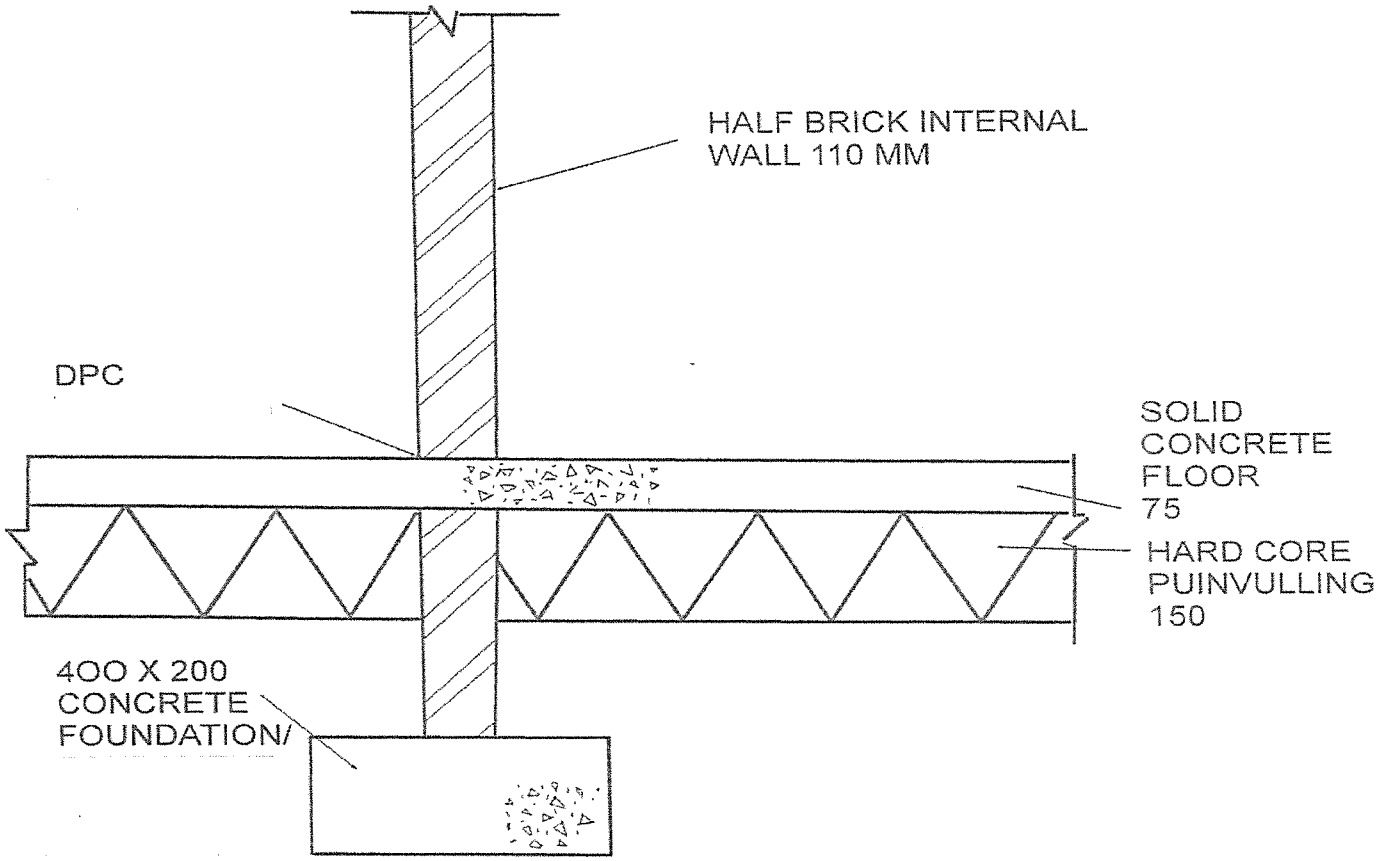

SECTION THROUGH SOLID CONCRETE FLOOR WITH HALF-BRICK INTERNAL WALL
SCALE 1 : 10 **[16]**

PLEASE NOTE THAT IF THE CORRECTNESS IS "0" THEN NO OTHER MARKS MAY BE ADDED
LET WEL DAT AS DIE KORREKTHEID "0" IS MAG GEEN ANDER PUNTE BYGETEL WORD NIE 100

Question/Vraag	1	141	16
correctness/korrektheid	12		
accuracy/akkuraatheid	1		
neatness/netheid	0.5		
titles;labels/hoofopskrifte;byskrifte	0.5		
dims&scale/afmetings&skaal	1		
setting out/uiteensit	1		

Question/Vraag	6	141	16
correctness/korrektheid	10		
accuracy/akkuraatheid	2		
neatness/netheid	1		
titles;labels/hoofopskrifte;byskrifte	1		
dim&scale/afmetings&skaal	1		
setting out/uiteensit	1		

Question/Vraag	2	141	12
correctness/korrektheid	9		
accuracy/akkuraatheid	1		
neatness/netheid	0.5		
titles;labels/hoofopskrifte;byskrifte	0.5		
dims&scale/afmetings&skaal	0.5		
setting out/uiteensit	0.5		

Question/Vraag	7	141	16
correctness/korrektheid	10		
accuracy/akkuraatheid	2		
neatness/netheid	1		
titles;labels/hoofopskrifte;byskrifte	1		
dim&scale/afmetings&skaal	1		
setting out/uiteensit	1		

Question/Vraag	3	141	16
correctness/korrektheid	9		
accuracy/akkuraatheid	3		
neatness/netheid	1		
titles;labels/hoofopskrifte;byskrifte	1		
dims&scale/afmetings&skaal	1		
setting out/uiteensit	1		

Question/Vraag	0		
correctness/korrektheid			
accuracy/akkuraatheid			
neatness/netheid			
titles;labels/hoofopskrifte;byskrifte			
dim&scale/afmetings&skaal			
setting out/uiteensit			

Question/Vraag	4	141	8
correctness/korrektheid	5		
accuracy/akkuraatheid	1		
neatness/netheid	0.5		
titles;labels/hoofopskrifte;byskrifte	0.5		
dims&scale/afmetings&skaal	0.5		
setting out/uiteensit	0.5		

Question/Vraag			
correctness/korrektheid			
accuracy/akkuraatheid			
neatness/netheid			
titles;labels/hoofopskrifte;byskrifte			
dim&scale/afmetings&skaal			
setting out/uiteensit			

Question/Vraag	5	141	16
correctness/korrektheid	10		
accuracy/akkuraatheid	2		
neatness/netheid	1		
titles;labels/hoofopskrifte;byskrifte	1		
dims&scale/afmetings&skaal	1		
setting out/uiteensit	1		

Question/Vraag			
correctness/korrektheid			
accuracy/akkuraatheid			
neatness/netheid			
titles;labels/hoofopskrifte;byskrifte			
dim&scale/afmetings&skaal			
setting out/uiteensit			

TOTAL: 100

Copyright reserved