higher education & training

Department:
Higher Education and Training
REPUBLIC OF SOUTH AFRICA

T100**(E)**(A8)T

NATIONAL CERTIFICATE

BUILDING ADMINISTRATION N5

(4090045)

8 August 2018 (X-Paper)
09:00–12:00

This question paper consists of 7 pages and 1 addendum.

Copyright reserved

DEPARTMENT OF HIGHER EDUCATION AND TRAINING
REPUBLIC OF SOUTH AFRICA

NATIONAL CERTIFICATE
BUILDING ADMINISTRATION N5
TIME: 3 HOURS
MARKS: 100

INSTRUCTIONS AND INFORMATION

1. Answer ALL the questions.
2. Read ALL the questions carefully.
3. Number the answers according to the numbering system used in this question paper.
4. Write neatly and legibly.

Copyright reserved

QUESTION 1

1.1 Name FIVE advantages of using mechanical plants. (5)

1.2 Name FIVE advantages of labour intensive-method. (5)
[10]

QUESTION 2

Briefly explain the following terms as used in the building industry:

2.1 Forecast

2.2 Planning

2.3 Organising

2.4 Co-ordinating

2.5 Controlling

(5 × 2) **[10]**

QUESTION 3

Indicate whether the following statements are TRUE or FALSE. Choose the answer and write only 'True' or 'False' next to question number (3.1–3.10) in the ANSWER BOOK.

3.1 The main contractor has a say in selecting a subcontractor.

3.2 The selected subcontractor enters into a contract with the main contractor.

3.3 The main contractor is a subsidiary to the subcontractor on site.

3.4 Nominated subcontractors get their payment from the architect via the main contractor.

3.5 A selected subcontractor needs to be recognised by the architect only to be appointed for the job.

3.6 The architect communicates directly with the subcontractor when there is a defect/default on his/her works.

3.7 Small-scale contractors may submit a joint bid.

3.8 Workmanship is the method used by the foreman to watch subcontractors on works.

3.9 A provisional sum may be used to pay material delivered on site.

3.10 Prime cost may be used to pay a subcontractor.

(10 × 1) **[10]**

Copyright reserved

QUESTION 4

Building material should be SANS compliant.

Copy the TABLE below in the ANSWER BOOK. Complete it by filling in the properties for the relevant materials.

MATERIAL	GOOD PROPERTIES	BAD PROPERTIES
Concrete		
Cement		
Timber		
Stock bricks		
Stones		

(5 × 2) **[10]**

QUESTION 5

A number of clauses in the principal building agreement regulate the handing over of the completed works.

Describe, define or explain the following key terms used in these clauses:

HINT: (Note that some are documents, some refer to periods and others are only concepts.)

5.1 Liability insurance

5.2 Latent defect liability

5.3 Patent defects liability period

5.4 Release of the construction guarantee

5.5 Penalty for non-completion

5.6 Extension of construction period

5.7 Final completion list

5.8 Certificate of final completion

5.9 Final account

5.10 Final payment certificate

(10 × 1) **[10]**

Copyright reserved

QUESTION 6

A few paragraphs on the general foreman regarding some of his/her qualification, personal characteristics and duties are given below.

Write only the missing word or phrases next to the question number (6.1–6.10) in the ANSWER BOOK.

Depending on the size of the project, the general foreman should be a fully qualified (6.1 …) or should have a technical diploma/degree in construction management or a similar qualification.

He/She must be able to work under extreme pressure and must be able to identify and solve (6.2 …). He/she should be flexible, practical and helpful.

Although he/she must (6.3 …) work to various trade foremen, the storekeeper, sub-contractors and others, the ultimate (6.4 …) for the smooth running of the project lies with him/her.

He/She must see to it that all activities run according to the master (6.5 …). The required equipment and material must always be available. Various trade teams and sub-contractors have to be (6.6 …) to ensure smooth interaction.

It is his/her duty to make sure that construction is carried out according to the contract (6.7 …), that the architects site instructions are incorporated and that (6.8 …) for any changes are issued and authorised.

He/She must be responsible for all (6.9 …) precautions that means he/she has to check, for example, if hard hats are worn.

He/She must maintain a neat site office and has to keep the drawing register and progress (6.10 …) up to date.

(10 × 1) **[10]**

QUESTION 7

Name FIVE contract documents and discuss their relatedness with one another.

(5 × 2) **[10]**

QUESTION 8

Refer to the Mass Haul on DIAGRAMS 1 and 2 on the ADDENDUM (attached) and answer the questions.

8.1 In DIAGRAM 2 ADDENDUM 1 (attached) give the name of the line AB. (1)

8.2 In DIAGRAM 1 ADDENDUM 1 (attached) the rising curve shows a broken line, this indicates (a) …, and the falling curve indicates (b) … (2 × ½) (1)

Copyright reserved

8.3 In both diagrams, what is the name of point Y. (1)

8.4 In DIAGRAM 1 on the ADDENDUM (attached) the moving of earth from cut to fill assume that the first load would be from the cut (8.4.1 …) to fill at (8.4.2 …) and last load from cut at (8.4.3 …) to the fill at (8.4.4 …). (4 × ½) (2)

8.5 In DIAGRAM 2 on the ADDENDUM (attached), state what C and G stand for. (1)

8.6 In DIAGRAM 1 on the ADDENDUM (attached) as the Mass Haul Diagram rises above the line AB, the haul is from (8.6.1 …). When the curve lies below the balance line, the curve is from (8.6.2 …). (2 × ½) (1)

8.7 In DIAGRAM 2 on the ADDENDUM (attached) EF indicates on the longitudinal section that the cut volume (8.7.1 …), equals the fill volume YNP, the amount of the volume is (8.7.2 …) and it obviously falls within the free haul distance. (2 × ½) (1)

8.8 In DIAGRAM I, the total cut volume is represented by the ordinate … (1)

8.9 Mass Haul Diagram plotted directly below the longitudinal section of the survey … (1)

[10]

QUESTION 9

9.1 Who has the power to issue a variation order? (1)

9.2 Name ONE way in which variation can affect the progress of work. (1)

9.3 Name the relationship to the following contract documents:

Schedule of Quantities and Day-work Schedule (2)

9.4 Define the term *idling period* on a construction site. (1)

9.5 Give ONE way in which a contractor can get a price for variations. (2)

9.6 What is day-works? (1)

9.7 State ONE circumstance that will call for day work. (1)

9.8 State ONE circumstance under which variation can be issued. (1)

[10]

QUESTION 10

10.1 State THREE ways in which effective communication can be achieved on site. (3)

10.2 Name the SEVEN most important items you would consider when preparing an agenda. (7)

[10]

TOTAL: 100

Copyright reserved

ADDENDUM

DIAGRAM 1

MASS-HAUL DIAGRAM

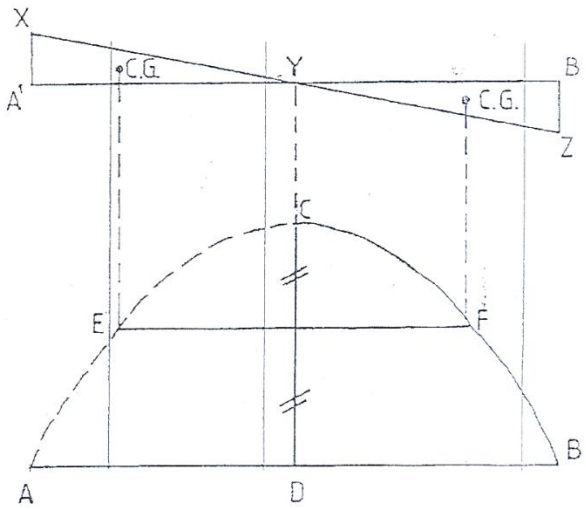

DIAGRAM 2

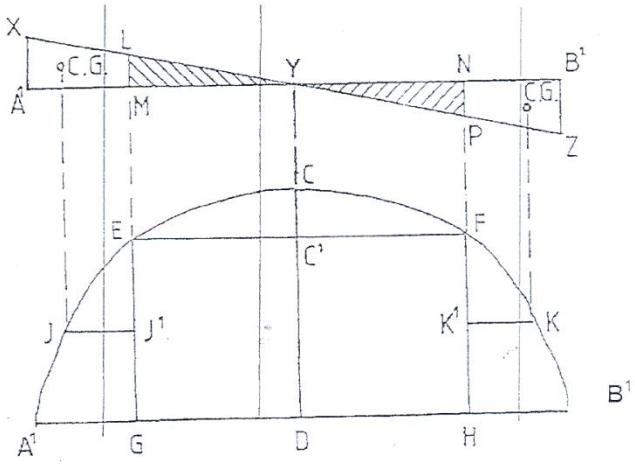

ASSUMING A FREE-HAUL DISTANCE OF 100M (EF)

Copyright reserved