higher education & training

Department:
Higher Education and Training
REPUBLIC OF SOUTH AFRICA

MARKING GUIDELINE

NATIONAL CERTIFICATE

BUILDING ADMINISTRATION N4

30 JULY 2019

This marking guideline consists of 7 pages.

Copyright reserved

QUESTION 1

1.1 E
1.2 E
1.3 A
1.4 C
1.5 B
1.6 C
1.7 C
1.8 A
1.9 D
1.10 A

(10 × 1) **[10]**

QUESTION 2

2.1 True
2.2 False
2.3 True
2.4 False
2.5 True
2.6 True
2.7 False
2.8 False
2.9 False
2.10 False

(10 × 1) **[10]**

QUESTION 3

3.1
- Delegated authority is more advanced.
- Site contracts are vested in a project manager who is assisted by other site staff.
- Organisation will involve various departments to provide specialist functions.
- Communication exists between the contract manager, clerk of works, general foreman and resident engineer. (4)

3.2
- It consists of a builder, a few tradesmen and labourers.
- There is little specialisation of functions.
- The builder undertakes all matters himself/herself, e.g. planning, accounting, etc.
- There is no delegation.
- There is direct communication between the contractor and the employer.

(Any 4 × 1) (4)

Copyright reserved

3.3
- The manager concentrates on the management.
- Communication on site is between the foreman and the architect.
- The responsibility of supervising the works is delegated to foreman.

(Any 2 × 1) (2)
[10]

QUESTION 4

4.1
- The site office should be near the stores to be aware of deliveries and to monitor visitors.
- Temporary offices should not be too near to the action where lots of noise and dust will interrupt conversation, meetings and telephone calls.
- The site office should be in the best spot to overlook the site.
- It should not be in the way of any traffic. (4)

4.2
- Material must be stored according to various special needs.
- Sheds or storerooms should be near the gate to ease deliveries.
- Car parks should be away from delivery and storage zones to hamper pilferage.
- Incorporate accommodation for the storekeeper.
- Consider the sizes and amounts of the expected materials.
- Allow for enough off-loading space for delivery vehicles. (Any 4 × 1) (4)

4.3
- The environment should not be harmed unnecessarily.
- Planning should be done early for traffic controls and huts for gate watchmen.
- Try to plan two gates.
- Do not duplicate public roads.
- Accesses should be from secondary roads and not from the main street.

(Any 4 × 1) (4)

4.4
- Operators must have a clear view when operating the plant.
- Noisy plant should be stationed far away from the site office and on firm soil.
- Think of theft and vandalism when planning.
- Mobile plant needs roadways for its activities. (Any 3 × 1) (3)

[15]

Copyright reserved

QUESTION 5

5.1
- Make a proportional sketch of the available space and write down the names of all machines required.
- Transfer the names into the correct position and connect them with arrows to show the flow of work.
- Start the layout planning at the entry of the timber store.
- Allow for sufficient working space around and between machines.
- Allow for large storage areas at the entrance between different tasks and at the dispatch.
- The supervisor should easily overlook machines.
- Grinders, glue and spray paint must be placed in a separate room.

(Any 6 × 1) (6)

5.2 5.2.1 To smoothen off the door after assembling

5.2.2 To cut the tongues and grooves

5.2.3 To cut at ends of the top rail

5.2.4 To cut the long pieces of timber across the grain to the wanted length

5.2.5 To suck out and remove the sawdust shavings and fumes from the glue and spray-paint

(5 × 2) (10)
[16]

QUESTION 6

6.1

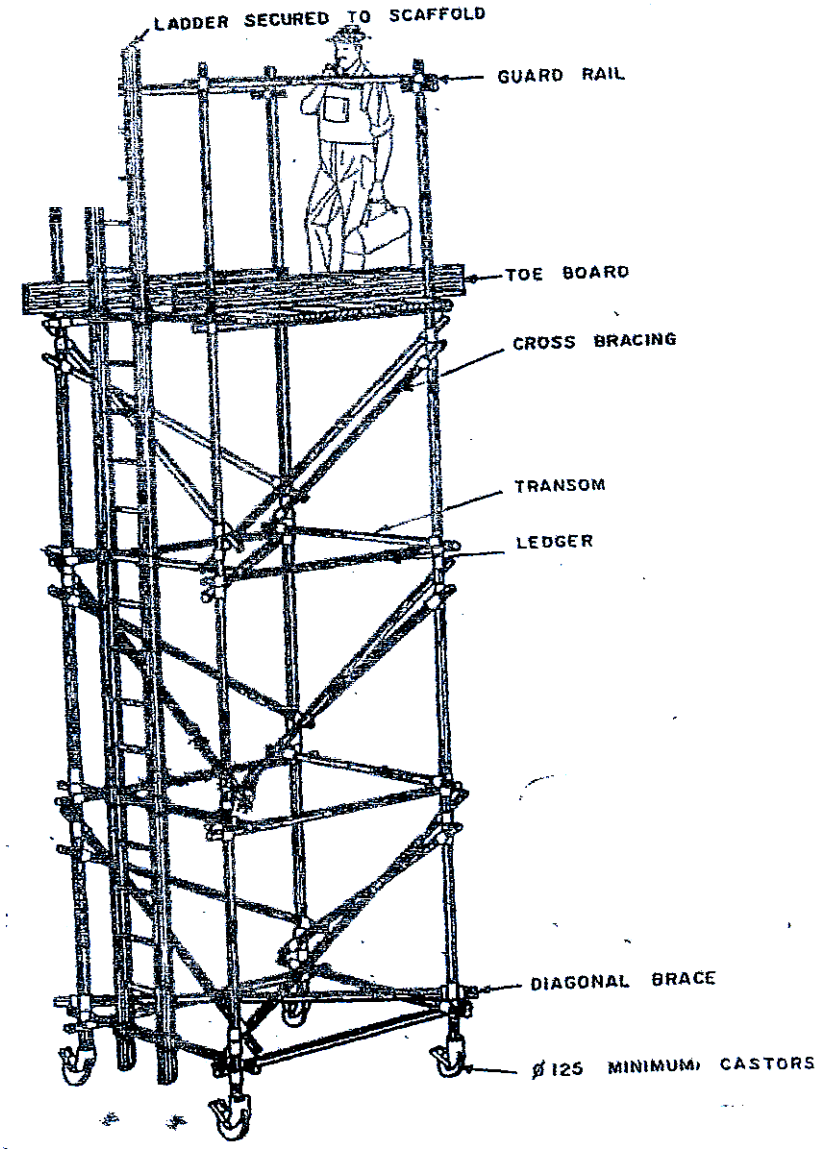

MOBILE SCAFFOLD

(4 for sketch + 4 for labels) (8)

6.2
- Only competent workers may erect the scaffolding.
- Scaffolds must be built according to SABS-standards.
- The condition must be recorded and reported to the general foreman.
- Putlogs must be properly rested onto the brickwork.
- The minimum thickness of the timber scaffold board should be 38 mm.
- Gaps between the boards may only be a few millimetres. (6)

[14]

Copyright reserved

QUESTION 7

7.1

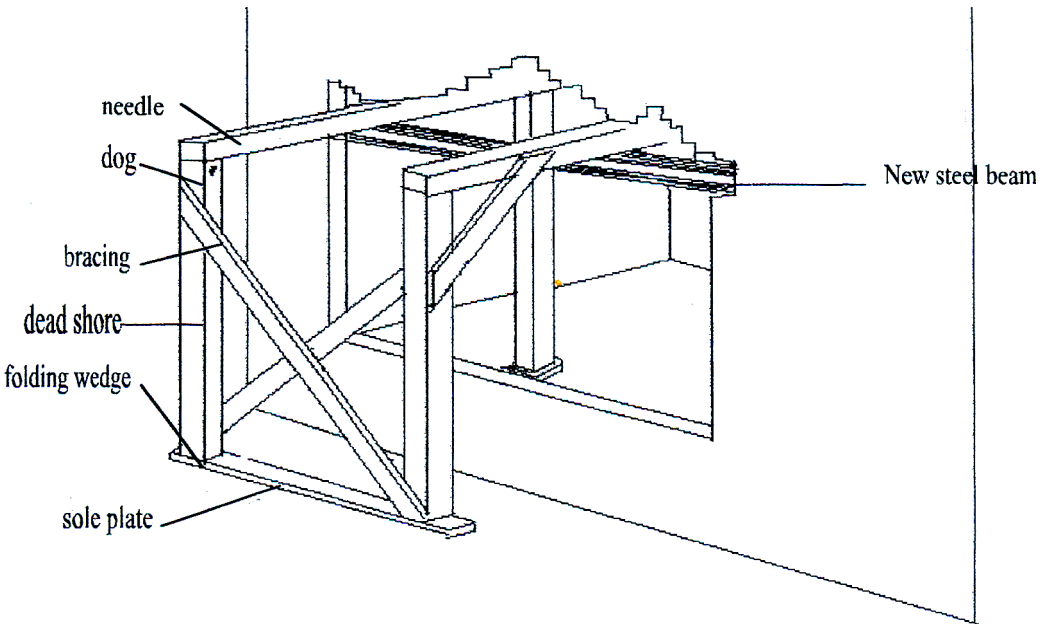

7.2

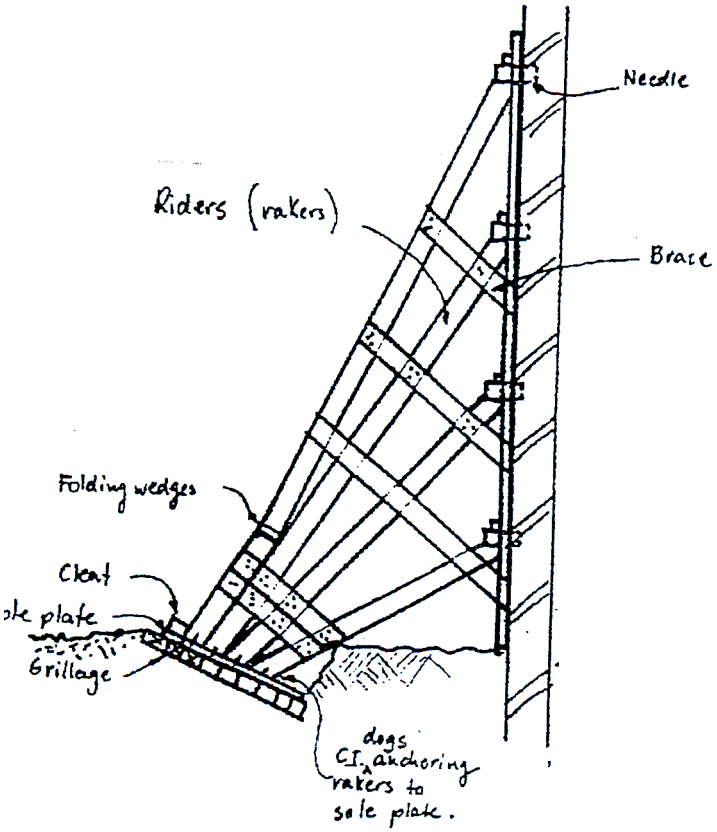

7.3

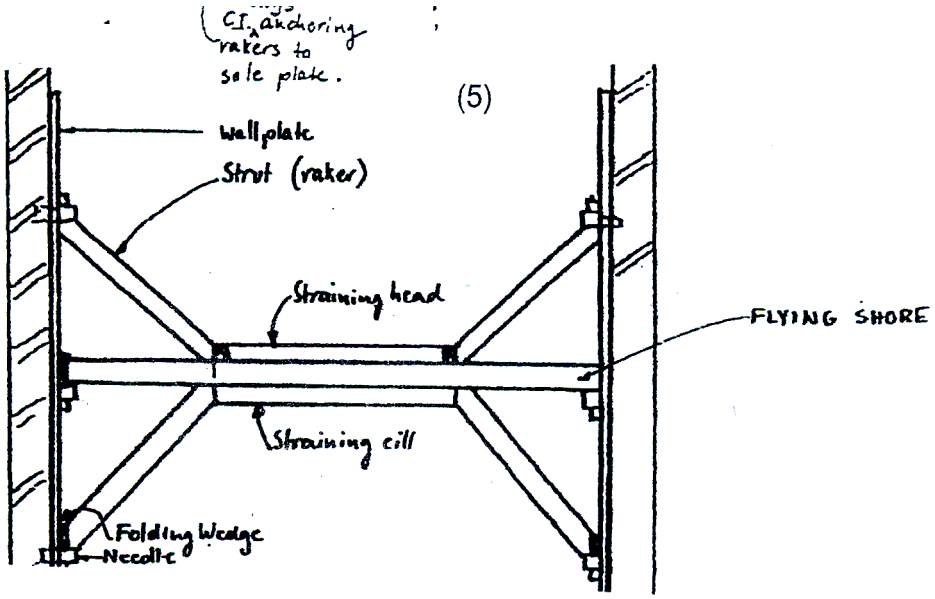

(5)

(3 × 5) **[15]**

QUESTION 8

8.1
- Where there is uneven loading on a foundation
- Where the subsoil has an unequal bearing capacity
- Where disturbance is likely to be caused by surrounding vegetation
- Where water and soil settlement act on the soil (4)

8.2
- Notify the owners of adjoining buildings and give them all relevant information.
- Carry out a detailed inspection of the building and record any defects and cracks.
- Check the levels at certain points and record them.
- Carry out soil tests to determine the cause of settlement.
- Remove any imposing loads.
- Apply shoring where required. (6)

[10]

TOTAL: 100

Copyright reserved