higher education & training

Department:
Higher Education and Training
REPUBLIC OF SOUTH AFRICA

MARKING GUIDELINE

NATIONAL CERTIFICATE

BUILDING ADMINISTRATION N4

2 April 2020

This marking guideline consists of 8 pages.

Copyright reserved

SECTION A

QUESTION 1

1.1 True
1.2 False
1.3 True
1.4 False
1.5 True
1.6 True
1.7 False
1.8 True
1.9 False
1.10 False

(10 × 1) **[10]**

QUESTION 2

2.1
- Delegated authority is more advanced.
- Site contracts are vested in a project manager and assisted by other site staff.
- These organisations will involve various departments to provide specialist functions.
- Communication exists between the contract manager,
- clerk of works, general foreman and the resident engineer. (Any 4 × 1) (4)

2.2
- Consist of the builder, a few tradesmen and labourers
- There is little specialisation of functions
- The builder undertakes all the matters himself such as planning, accounting, etc.
- No delegation is exercised.
- There is direct communication between the contractor and the employer.

(Any 4 × 1) (4)

2.3
- The manager concentrates on the management.
- Communication on site is between the foreman and the architect.
- The responsibility of supervising the works, is delegated to the foreman.

(Any 2 × 1) (2)
[10]

QUESTION 3

3.1

CONSTRUCTION SITE	WORKSHOP
• No shadow for the works or protection when raining • No project is the same as the previous one • During bad weather valuable construction time is lost • Construction work is dangerous at times • Supervision is difficult • Storing of materials is a problem • Communication is a problem	• Work done under shelter • Temperatures can be regulated • Standard items are manufactured • Dangerous machines are placed separate from the other machines • Supervision and communication can be easy • Permanent storing can be allocated • Materials and products will not be damaged by rain

(Any 13 × 1) (13)

3.2
- Make a proportional sketch of the available space and write down the sizes of the machines.
- Write down the names of all the machines required.
- Transfer the names into the correct positions and connect them with arrows to show the flow of work.
- Place the machine in a logical order.
- Allow for sufficient working space.
- Noisy machines should be placed far from the office.
- Pay attention to safety regulations. (Any 5 × 1) (5)

3.3 They are used for:

3.3.1 Cutting metal and for cutting brickwork at an angle at the gables
3.3.2 Breaking up hard surfaces such as concrete slabs
3.3.3 Moving liquids vertically or horizontally
3.3.4 Cutting timber across and along the grain
3.3.5 Making holes in timber, masonry and metals

(5 × 1) (5)
[23]

QUESTION 4

4.1
- Accidents are avoided.
- No or few unforeseen problems occur.
- Completion is always on time.
- No money is wasted and production is high
- Quarrels and disputes with the employer are prevented.
- The authorities are satisfied.
- Employees enjoy the work and can earn good wages. (Any 5 × 1) (5)

4.2 4.2.1

- The contractor should draw up the methods of the primary operations and development in more detail.
- The site layout plan must be planned.
- It should indicate how labour recruitment should start.
- The plant installation must be designed and ordered.
- The various subcontractors should be brought into the planning so that the work of each one can be phased into the overall plan.
- Schedules for delivery dates must be prepared and orders for bulk material deliveries must be negotiated and placed.

(Any 4 × 1) (4)

4.2.2

- Scheduling/planning the quantities of work to be done each week should be done.
- The labour requirements chart for the period of the detailed plan should be compiled as the day-to-day labour requirements fluctuate to assure reasonable labour utilisation.
- The plant must be utilised for a specialised task. (3)

4.2.3

- A contractor should take a decision for which project the firm will tender and should also visualise and analyse the major tasks.
- The contractor should estimate and weigh all possibilities to be gained.
- The contractor should identify the methods of performing the major operations. (3)

[15]

TOTAL SECTION A: 58

SECTION B

QUESTION 5

5.1

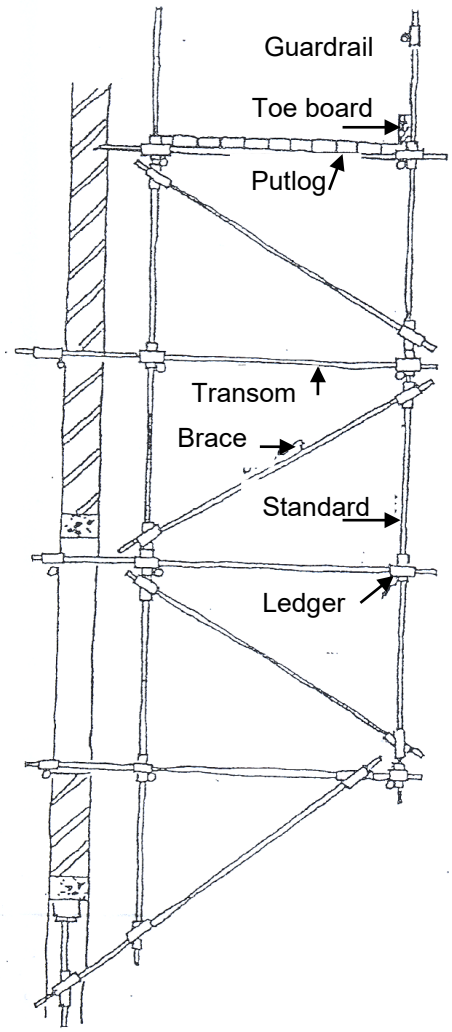

CANTILEVER SCAFFOLD

(12)

5.2

- The scaffold has to be built according to SABS standards.
- After storms and heavy rain an additional inspection must be made.
- All uprights must be plumb.
- The putlog must be properly rested onto the backwork.
- The minimum thickness of the timber scaffold board should be 38 mm.
- Planks must be nailed to each other.
- The platform must be closely boarded.
- Gaps between the boards may be a few millimetres. (7)

[19]

QUESTION 6

6.1

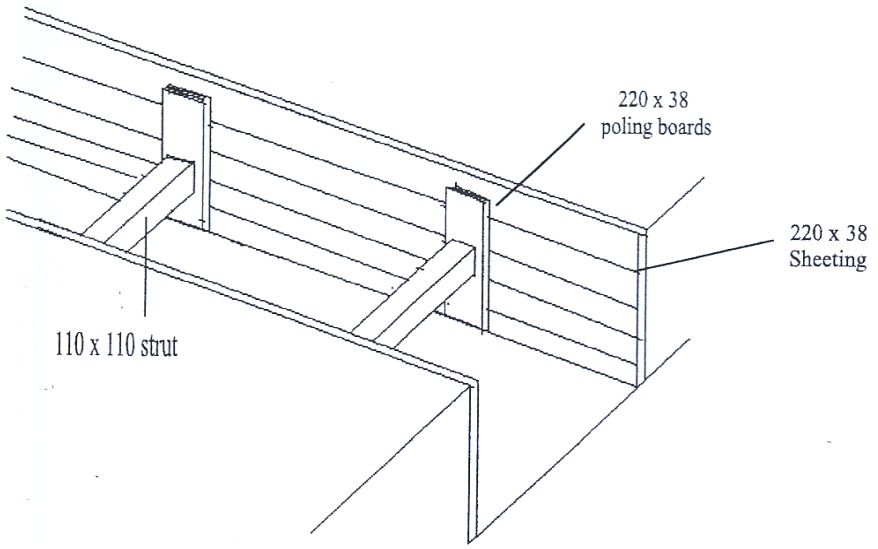

SOFT SOIL

(5)

6.2

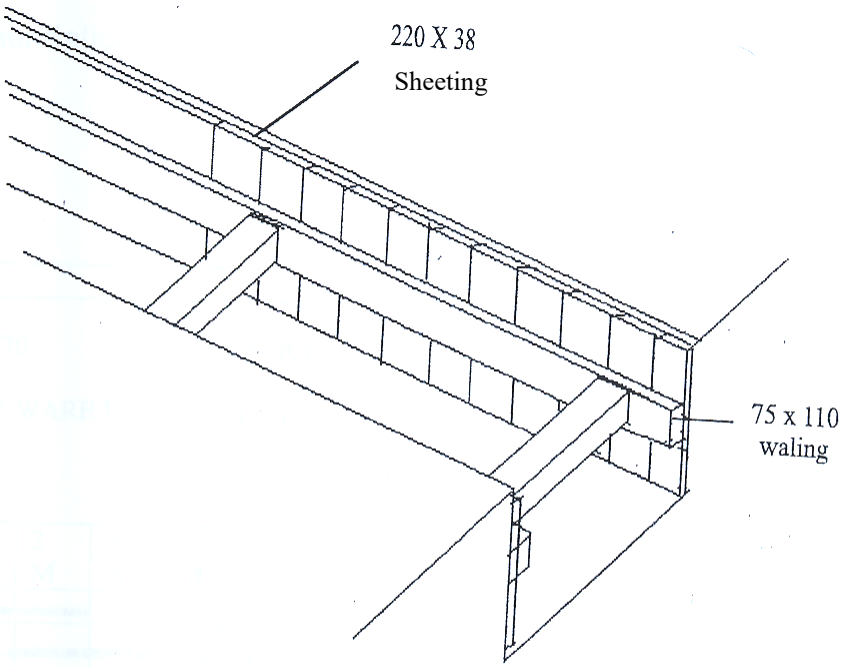

LOOSE SOIL

(5)
[10]

QUESTION 7

7.1

A&M CONSTRUCTION LTD **INTERNAL REQUISITION**

To .....

From ..... ContractNo.....

Date ..... No. 314

Please supply or order for the above Site the following which is required by ..... (enter date)

Quantity	Enter full description of materials
.....	.....
.....	.....
.....	.....
.....	.....
.....	.....
.....	.....
.....	.....
.....	.....
.....	.....
.....	.....
.....	.....
.....	.....
.....	.....
.....	
.....	
.....	

Date received	Action by:	Order placed ..... Order No. ..... Delivered: .....

(5)

7.2

AFRICAN BUILDING SUPPLIERS

71 Church Str.
0041 DIE WILGERS

Tel. (012) 73 5612
FAX (012) 73 5611

DELIVERY NOTE

No. 678

Te .....
Address .....
.....

YOUR ORDER No.....
Date .....

Please receive the undermentioned goods:

Quantity	Description of Goods	

Remarks:
.....
.....
.....
.....

Received by
.....
Delivered by
.....
Date: .....

Complaints of shortages or damages cannot be recognised unless notified in writing to the company's Head Office within *3 days* of delivery, stating (a) Delivery Note No. and (b) Date. (5)

[10]

QUESTION 8

8.1 Speculation
8.2 Rotation
8.3 Recommendation

(3 × 1) **[3]**

TOTAL SECTION B: 42
GRAND TOTAL: 100

Copyright reserved