higher education & training

Department:
Higher Education and Training
REPUBLIC OF SOUTH AFRICA

MARKING GUIDELINE

NATIONAL CERTIFICATE

NOVEMBER EXAMINATION

BRICKLAYING AND PLASTERING THEORY N2

22 NOVEMBER 2016

This marking guideline consists of 7 pages.

Copyright reserved

QUESTION 1

1.1 J
1.2 I
1.3 E
1.4 B
1.5 F
1.6 K
1.7 H
1.8 L
1.9 A
1.10 C

(10 × 1) **[10]**

QUESTION 2

2.1

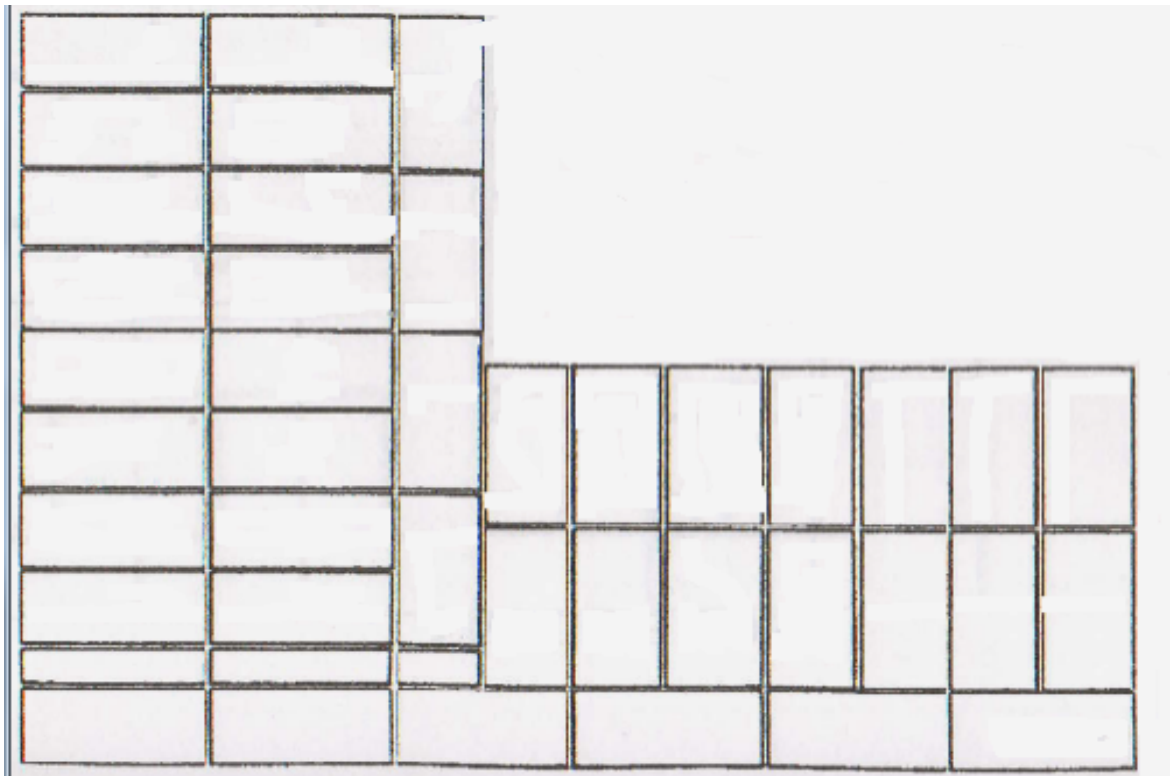

Approximate scale:	2
Correct bond to main wall:	2
Correct bond to adjoining wall:	2
Correct bonding at corner:	2
Two-and-a-half brick (right-angled):	2
TOTAL:	**(10)**

(10)

2.2

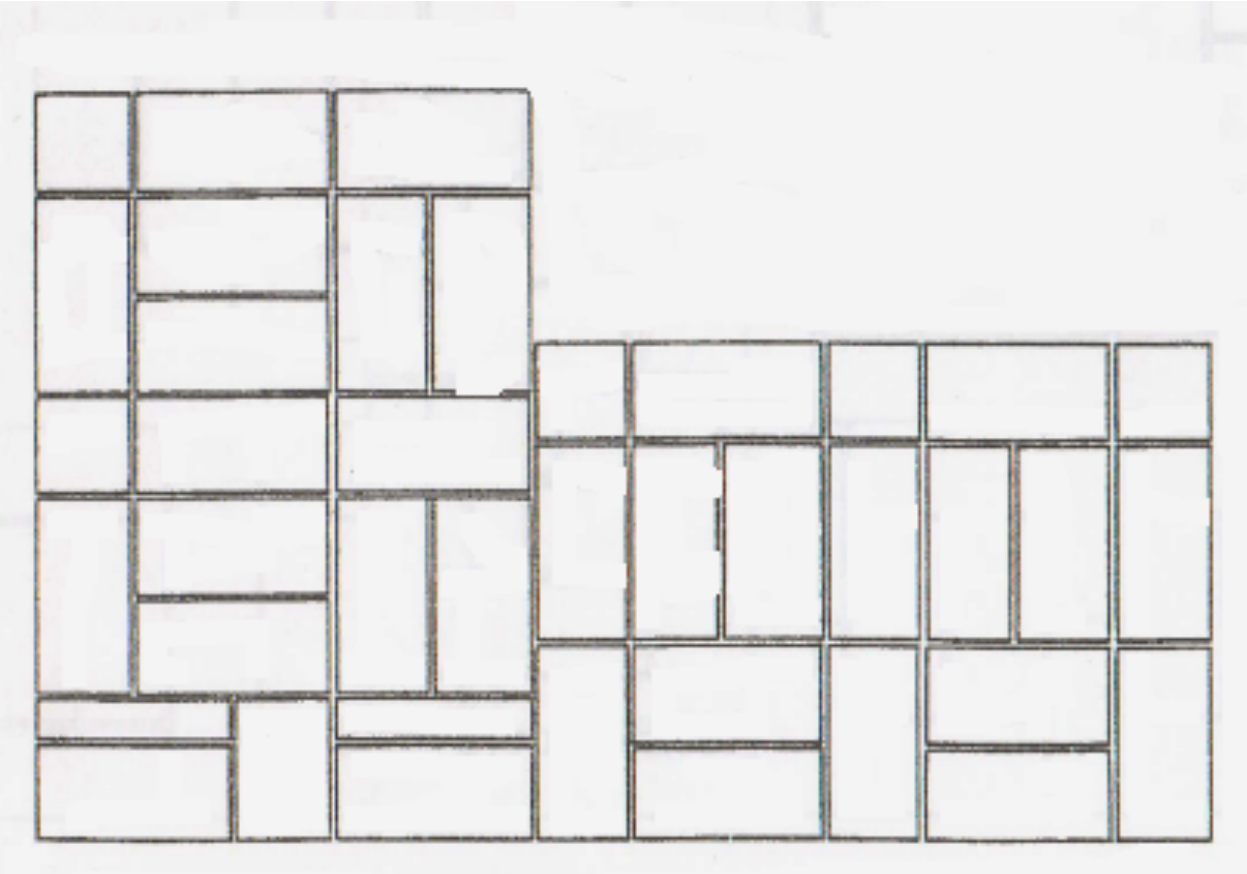

Approximate scale:	2
Correct bond to main wall:	2
Correct bond to adjoining wall:	2
Correct bonding at corner:	2
Two-and-a-half brick (right-angled):	2
TOTAL:	**(10)**

(10)
[20]

QUESTION 3

3.1 The area will not look attractive at all,✓ and weeds and other vegetation will grow in between the bricks.✓ Paving bricks will just come out from the ground because of poor compaction during the paving session.✓ The area will not be level thus creating a water-logged paving.✓ (Any relevant 3 × 1) (3)

3.2 Materials:

- Tile grout
- Tile cement (2 × 1) (2)

Tools:

- Tile gauge
- Tile cutter
- Tile snapper
- Tile nipper
- Serrated trowel
- Squeegee
- Tile spacers
- Combination square
- Steel tape measure
- Tilers' hammer
- Rubber mallet
- Spring dividers (Any relevant 2 × 1) (2)

3.3 3.3.1 Floor finishes = 16 mm✓

3.3.2 Stair treads = 16 mm✓

3.3.3 Skirting = 9 mm✓

3.3.4 Stair risers = 9 mm✓

3.3.5 Stair strings = 6 mm✓

(5 × 1) (5)

3.4 Immediately after the finish is laid, it should be protected from wind, draughts, and strong sunlight,✓ and as soon as it is hard enough to walk on without damage to the surface, it should be cured for at least seven days.✓

(Any other relevant answer is allowed) (2)

[14]

QUESTION 4

4.1 Silica rock contains 95% to 97% silica✓ and 1% to 2% lime.✓
The rock is placed in a mixer✓ where the correct amount of lime is added to bind the bricks.✓The bricks are then moulded under high pressure✓ after which they will be dried and fired in tunnel kilns✓ at a very high temperature. They will finally be quenched in water✓ after firing to prevent them from expanding when heated. (1 × 7) (7)

4.2
- The slope of the roof
- The shape of the building
- The direction of the flue in relation to the flue outlet
- The proximity of the trees and/or other buildings
- The position of the door and window openings (Any 4 × 1) (4)

4.3 4.3.1 Chimney shaft :

The part of the chimney which rises✓ above the roof✓ of a house or from the ground.

4.3.2 Chimney back:

That part of the wall✓ which is the back of the fireplace.✓
(2 × 2) (4)
[15]

QUESTION 5

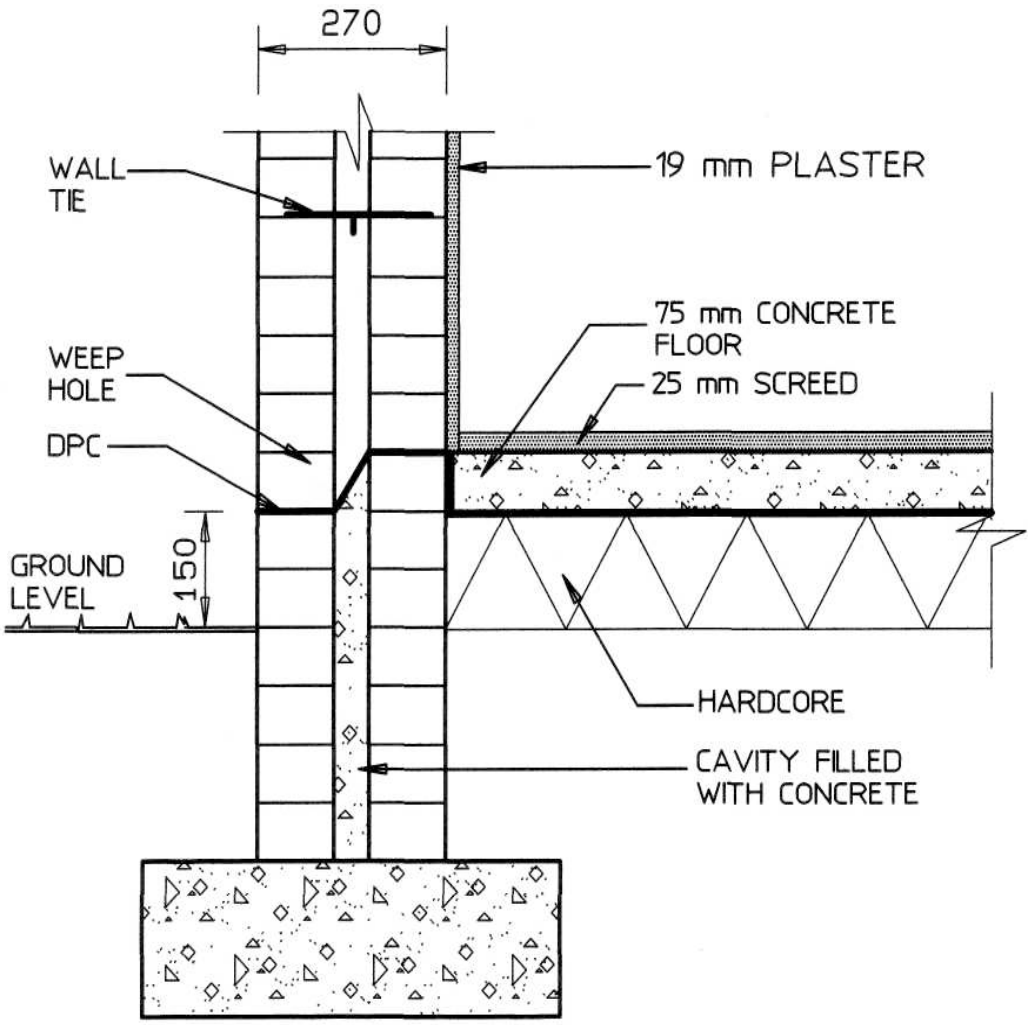

VERTICAL CROSS-SECTIONAL VIEW OF A 270 mm CAVITY WALL CONSTRUCTION SHOWING FOUNDATION AND CONCRETE SLAB *SCALE 1:10*

Marks distribution

Correctness	4
270 mm cavity wall	3
D.P.C	2
Cavity filled with concrete	2
Labelling	6
Wall ties	2
Scale	1
TOTAL MARKS	**20**

[20]

QUESTION 6

6.1
6.1.1 Constant
6.1.2 Top/bottom
6.1.3 Bottom/top
6.1.4 Height

(4 × 1) (4)

6.2
6.2.1 True
6.2.2 False
6.2.3 False
6.2.4 False
6.2.5 False
6.2.6 True

(6 × 1) (6)
[10]

QUESTION 7

7.1 Trestle scaffold means a working platform supported on trestles, stepladders, stand tripods. (1)

7.2
- Ensure all material, tools and rubble are removed from the working platform.
- Remove the scaffold planks from the trestles.
- Clean the scaffold planks and stack them in the appropriate area.
- Remove the locating pins.
- Lower the rest of its lowest position and insert the locating pins.
- Fold the trestles by collapsing the stays.
- Stack the trestle in the appropriate area. (7)

7.3
7.3.1 Base plates:
- Standards will rest on these to spread the weight of the scaffold.✓

7.3.2 Base jacks:
- They allow the height of the scaffold to be adjusted when scaffolding is erected over uneven ground.✓

7.3.3 Toe board:
- They act as a barrier along the sides and ends of a platform to stop material from falling.✓

(3 × 1) (3)
[11]

TOTAL: 100

Copyright reserved