201304T015

higher education & training

Department:
Higher Education and Training
REPUBLIC OF SOUTH AFRICA

T80(E)(M25)T
APRIL EXAMINATION

NATIONAL CERTIFICATE

BRICKLAYING AND PLASTERING THEORY N2

(11010102)

25 March 2013 (X-Paper)
09:00–12:00

This question paper consists of 4 pages.

Copyright reserved

DEPARTMENT OF HIGHER EDUCATION AND TRAINING
REPUBLIC OF SOUTH AFRICA

NATIONAL CERTIFICATE

BRICKLAYING AND PLASTERING THEORY N2

TIME: 3 HOURS

MARKS: 100

INSTRUCTIONS AND INFORMATION

1. Answer ALL the questions.
2. Read ALL the questions carefully.
3. Number the answers according to the numbering system used in this question paper.
4. Write neatly and legibly.

Copyright reserved

QUESTION 1

1.1 Name FOUR materials that can be used as a coping to finish off a wall. (4 x 2) (8)

1.2 Explain briefly how wood-wool slabs are manufactured. (4)

1.3 What material is used to manufacture pumice blocks? (2)

1.4 Name the materials used to manufacture calcium silicate bricks. (4)

1.5 What precautions need to be taken before plaster boards are fixed in position on site? (2)
[20]

QUESTION 2

2.1 Define the term *terrazzo*. (2)

2.2 Briefly explain the procedure used to lay a terrazzo finish on a concrete floor. (5 × 2) (10)

2.3 Name the material used to manufacture fire bricks. (2)

2.4 Name SIX required properties of fire bricks. (6 × 1) (6)
[20]

QUESTION 3

3.1 Define the following scaffolding terms:

3.1.1 Base plate

3.1.2 Sole plate

3.1.3 Guard rail

3.1.4 Ledger

3.1.5 Brace coupler

3.1.6 Trestle (6 × 2) (12)

3.2 Name any TWO bonds that are commonly used for clay pavers. (2)

3.3 Name THREE different ways of forming edge restraints for pavers. (3 x 2) (6)
[20]

Copyright reserved

QUESTION 4

Draw, to an approximate scale of 1 : 10, alternate plan courses of a two-brick corner in Flemish bond.

[20]

QUESTION 5

Draw, to an approximate scale of 1 : 10, a vertical section through the bottom eight courses of a one-brick wall. The drawing must show the following details:

- Concrete foundation: 600 mm × 300 mm
- Ground level
- Damp course
- Floor slab: 75 mm
- Hard core: 75 mm
- Plaster internally: 15 mm
- Wooden skirting: 75 mm × 13 mm

[20]

TOTAL: 100

Copyright reserved

higher education & training

Department:
Higher Education and Training
REPUBLIC OF SOUTH AFRICA

MARKING GUIDELINE

NATIONAL CERTIFICATE

APRIL EXAMINATION

BRICKLAYING AND PLASTERING THEORY N2

25 MARCH 2013

This marking guideline consists of 5 pages.

Copyright reserved

QUESTION 1

1.1
- Face bricks
- Precast concrete
- Dressed stone
- Plaster bricks (4 × 2) (8)

1.2
- Wood is cut into specified sizes and lengths
- The cut timber then passes through a shaving machine
- The long shaving thus produced is known as wood wool
- The wood wool is then bonded together with cement (4 × 1) (4)

1.3 Pumice blocks are made from building rubble (2)

1.4 Calcium silicate bricks are manufactured from the following:

- High grade sand or crushed stone
- Lime
- Water
- Pigment (Colouring) (4 × 1) (4)

1.5 The boards should be stacked in the area where they are to be used. (2)
[20]

QUESTION 2

2.1 Terrazzo finishes offers good resistance to abrasion, and provides a decorative surface which is specially suitable for entrance halls, stairways, et cetera. (2)

2.2
- The cement slurry is brushed over the area of the cleaned floor slab.
- The cement mortar screed is then spread and compacted to within at least 16 mm of the finished floor level.
- Dividing strips if not fixed previously, are set into the mortar to the required level and depth.
- While the mortar screed is still plastic, the terrazzo mix is spread in the bays, to a level slightly above that of the dividing strips and compacted by lightly tamping, or rolled using a solid roller.
- Trowelling may be necessary to produce a true surface. (5 × 2) (10)

2.3 The following material is used to manufacture fire bricks:

- silica
- alumina
- iron oxides

(Any 2 × 1) (2)

Copyright reserved

2.4
- Refractoriness
- Resistance to attack by corrosive materials such as glasses, metals, slag and salts
- High strength at ordinary temperatures
- Resistance to spalling
- Ability to withstand abrasion
- Thermal conductivity suitable for the conditions of use (6 × 1) (6)

[20]

QUESTION 3

3.1 3.1.1 **Base plate:** A plate for distributing the load from a standard or raker over the bearing surface.

3.1.2 **Sole plate:** A spreader made of timber used to distribute the load from a scaffold onto the ground.

3.1.3 **Guard rail:** A rail preventing persons from falling of the scaffolding.

3.1.4 **Ledger:** A longitudinal horizontal member fixed to the standards to support putlogs or transoms.

3.1.5 **Brace coupler:** A coupler used to secure two tubes at right angles to each other.

3.1.6 **Trestle:** A self supporting stand for supporting working platform boards.

(6 × 2) (12)

3.2
- Basket weave
- Herringbone
- Stretcher
- Stack (Any 2 × 1) (2)

3.3
- Precast concrete kerbs
- Haunched concrete
- Cast in-situ concrete (3 × 2) (6)

[20]

Copyright reserved

QUESTION 4

Alternate plan courses of a two-brick corner in Flemish bond.

FLEMISH BOND (TWO-BRICK WALLING)

COIGN (RIGHT ANGLE)

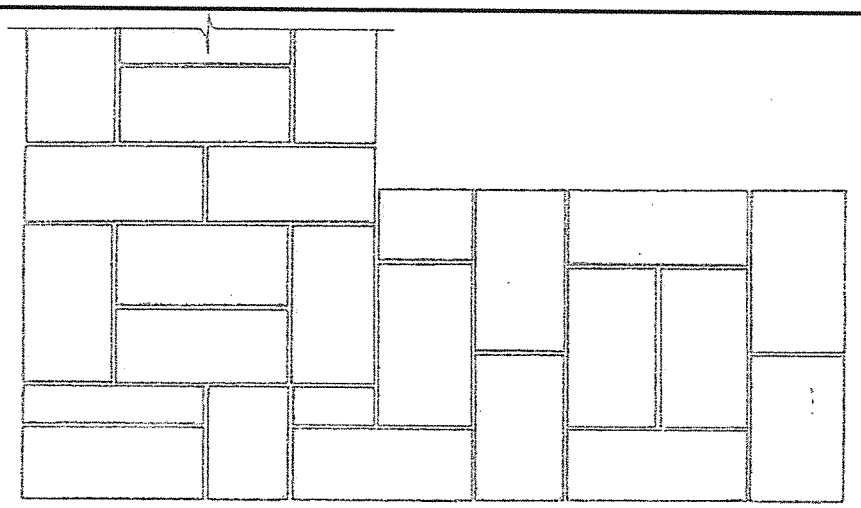

TWO-BRICK COIGN
ALTERNATE PLAN COURSES

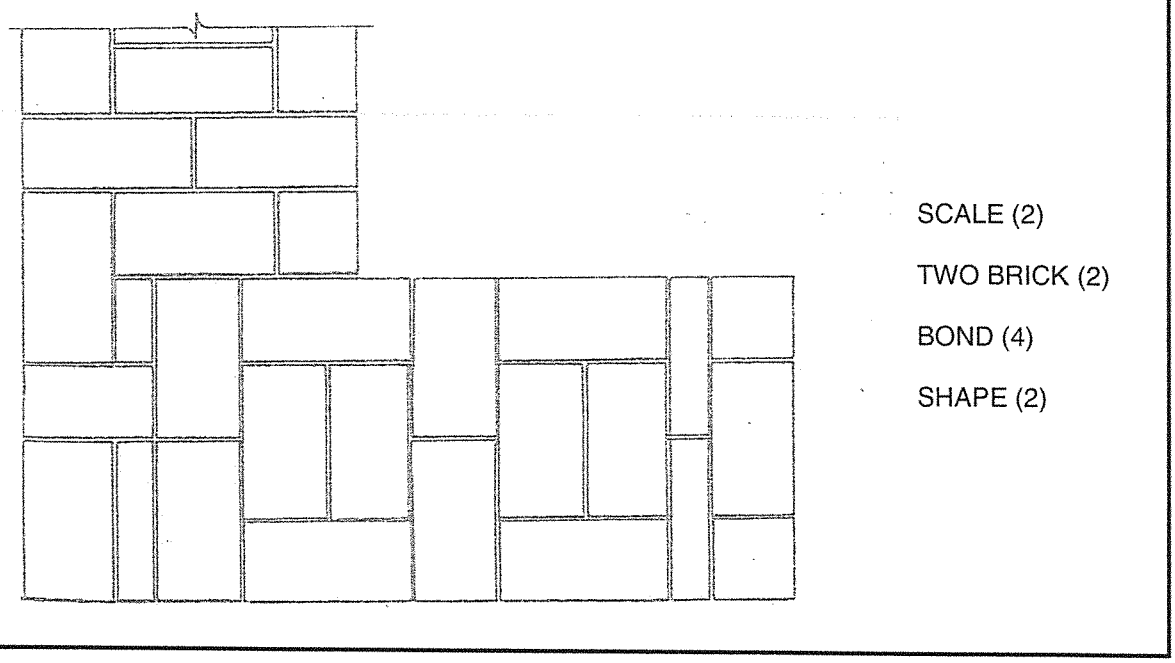

[20]

Copyright reserved

QUESTION 5

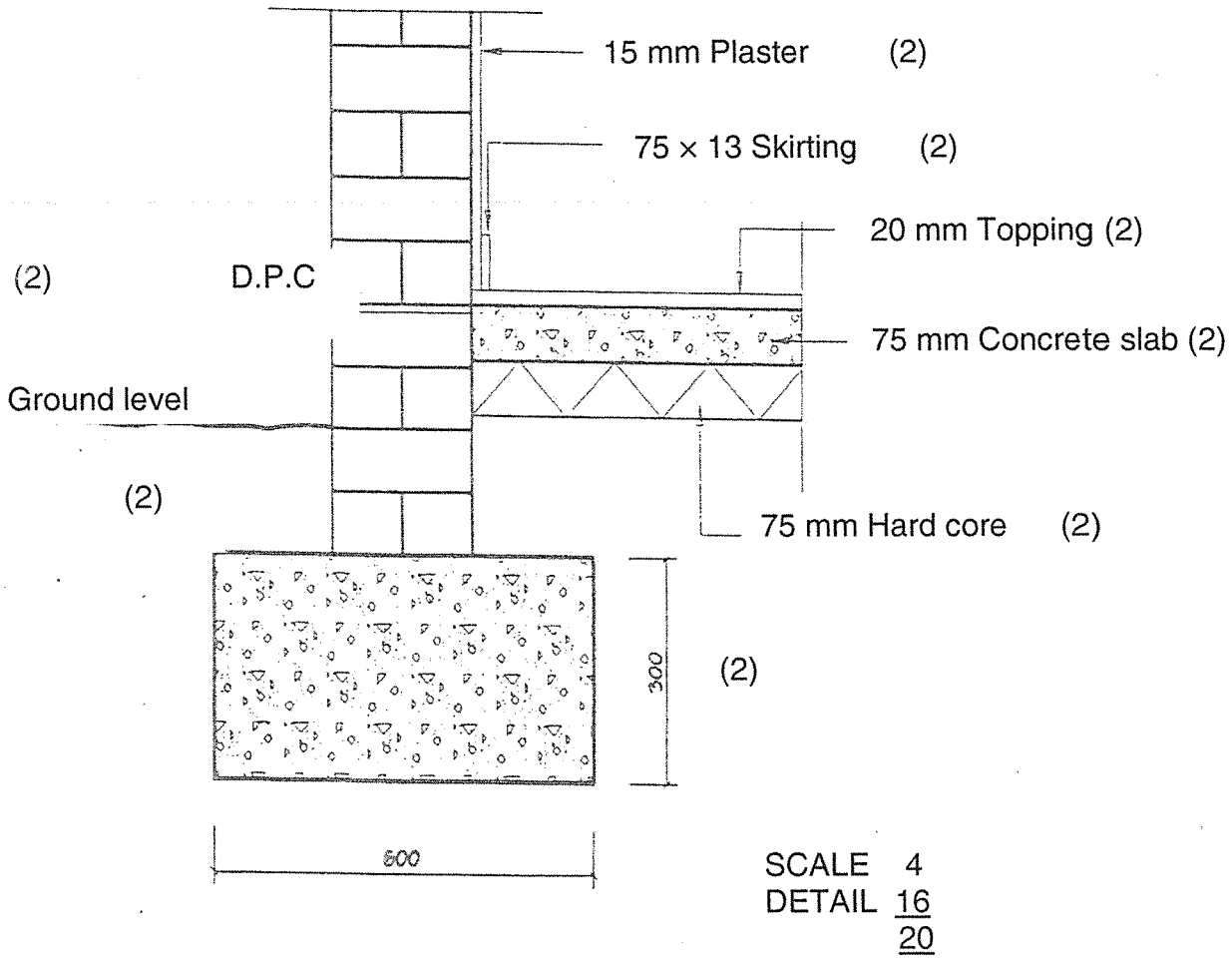

[20]

TOTAL: 100

Copyright reserved