higher education & training

Department:
Higher Education and Training
REPUBLIC OF SOUTH AFRICA

MARKING GUIDELINE

NATIONAL CERTIFICATE

ARMATURE WINDING THEORY N2

6 AUGUST 2019

This marking guideline consists of 7 pages.

Copyright reserved

QUESTION 1

1.1 1.1.1 Wave = 0,637 × V_{max}
= 0,637 × 100
= 63,7 volts

1.1.2 V_{rms} = 0,707 × V_{max}
= 0,707 × 100
= 70,7 volts

1.1.3 Form factor = V_{rms}/wave
= 70,7/63,7
= 1,111

(3 × 2) (6)

1.2 Slip is the ratio of true power to apparent power. It can be expressed in a percentage. (2)

1.3

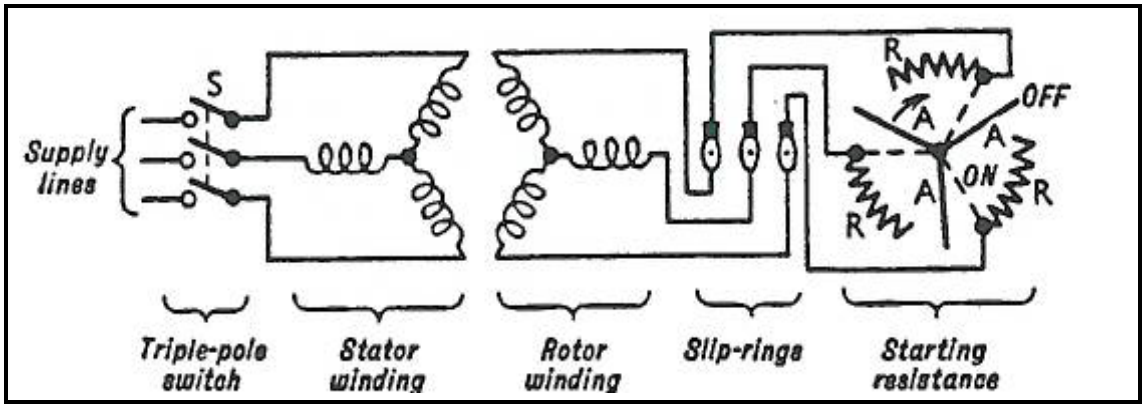

(5)

1.4 The main difficulty is to arrange the windings and connections not to obstruct each other. (2)

1.5 P = 3VIcosΘ✓
= 3 × 525 × 11 × 0,8✓
= 8 002,07 W✓ (3)

[18]

QUESTION 2

2.1 Wave and lap winding (2)

2.2

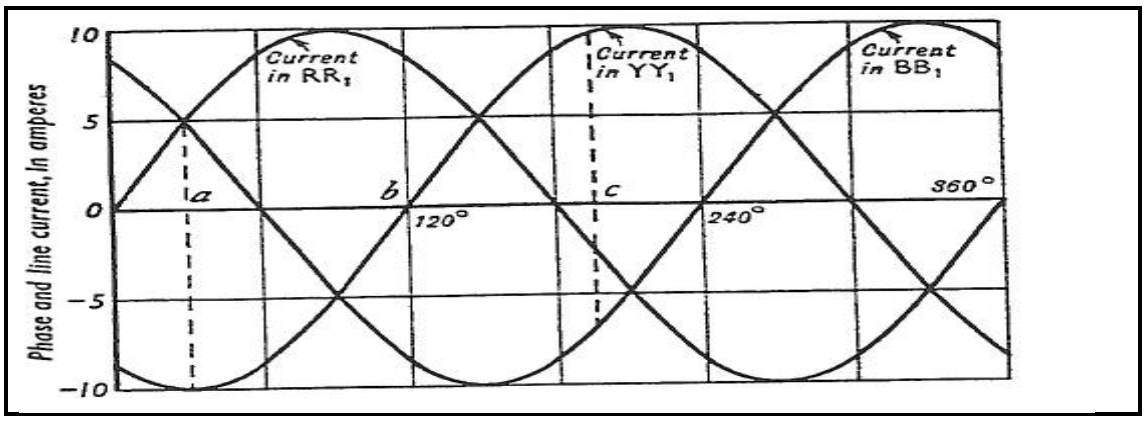

(4)

2.3 The main function is to disconnect the starting winding once the motor reaches 75% of its rated rotation. (2)

2.4
- Take data.
- Strip the windings.
- Clean and insulate the slots.
- Rewind the motor.
- Test the connections.
- Test the windings.
- Bake and varnish. (7)

2.5

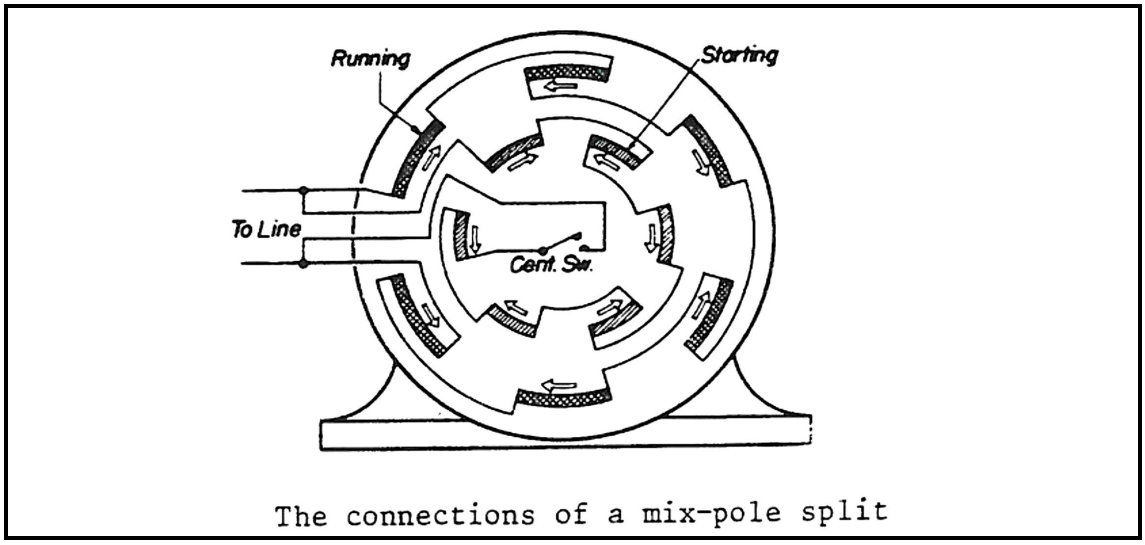

The connections of a mix-pole split

(6)

[21]

QUESTION 3

3.1

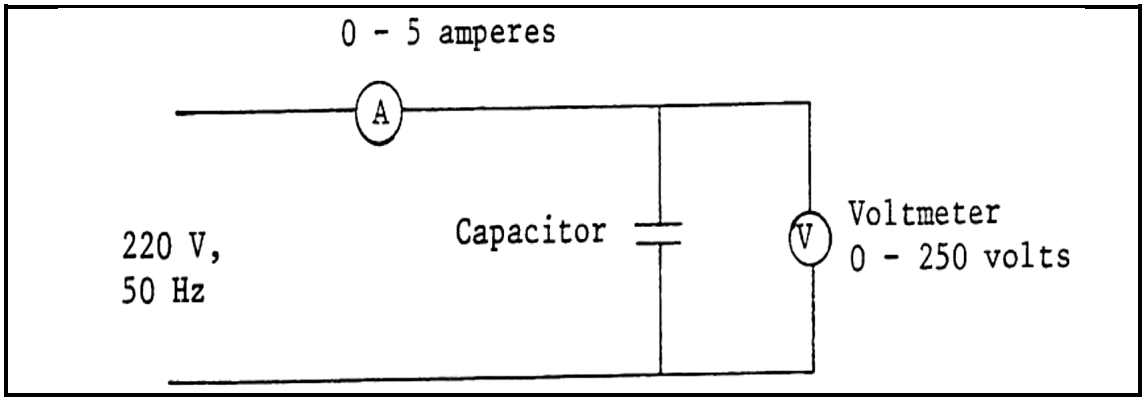

(3)

3.2 The capacitor is made with paper impregnated with oil and inserted in a container filled with oil. This is done to increase the insulating properties and to keep the capacitor from overheating. (2)

3.3 Ct = C1 + C2 + C3
= 2,4 + 4,1 + 8,3
= 14,8 µF (2)

3.4 The direction of rotation can only be reversed by using a throwing switch. Most of them cannot be reversed as they have a single winding connected to the supply. (2)

3.5

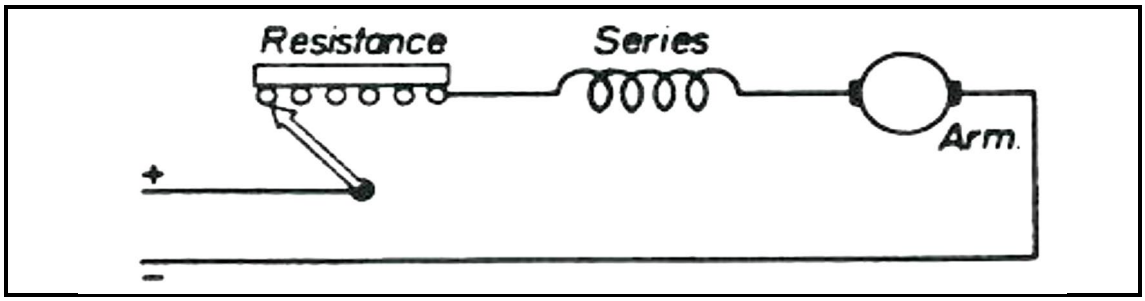

(3)

3.6

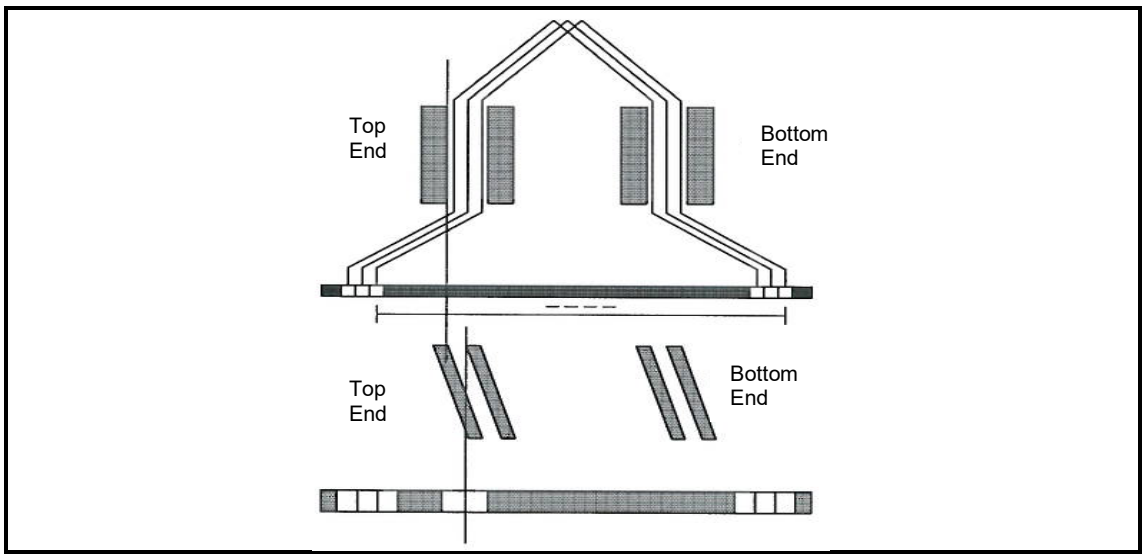

(4)
[16]

QUESTION 4

4.1 4.1.1 P_{TOTAL} = P1 + P2
= 10,4 + (-3,4)
= 7 kW (2)

4.1.2 $\tan\theta = 1{,}73\left[\frac{W1 - WI}{W1 + W2}\right]$

$\tan\theta = 1{,}73\left[\frac{10{,}4 - (-3{,}40)}{10{,}4 + (-3{,}4)}\right]$

$\tan\theta = 3{,}4$
= arc tan 3,4
= 73,67° (5)

4.2 Direct, indirect and regenerative method (3)

4.3

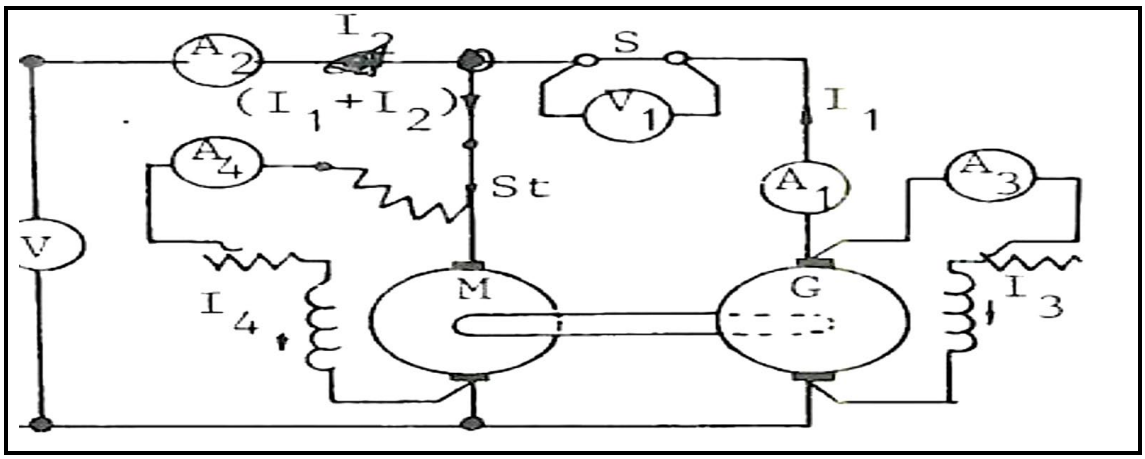

(6)

4.4

DATA SHEET FOR SPLIT PHASE MOTOR

Make

Kilowatt	rotational frequency	volts	amperes
Cycle	Type	Frame	Style
Temperature	Model	Serial	Phase
No. of Poles		No. of Slots	

Winding	Size Wire	No. of Circuits	Pitch	Turns
Running				
Starting				

Slot No.	1 2 3 4 5 6 7 8 9 10 11 12 13 14 15 16 17 18 19 20 21 22 23 24 25 26 27 28 29 30 31 32 33 34 35 36 1
Running	
Starting	

Rotation Clockwise Counter Clockwise

(7)
[23]

QUESTION 5

5.1 This type of cooling system needs a heat exchanger in which the heat of the transformer oil is given to the cooling water. The cooling water is taken away and cooled in separate coolers. The oil is forced through the heat exchanger. The oil pump pumps the oil from the transformer to the heat exchanger though the top pipes. Oil from the heat exchanger is pumped back to the transformer through the bottom pipe. This type of cooling is provided for very large transformers which have ratings of some hundreds of MVA (the generating transformer will have a very high rating and a rating equal to the rating of the generator). This type of transformers is used in large substations and power plants. (2)

5.2 5.2.1 $P = 2\pi N(F1 - F2)r/60$
$= [2 \times \pi \times 960(226 - 180) \times 0,225]/60$
$= 1\ 040,49$ watts

5.2.2 $P = VI$
$P = 230 \times 28$
$= 6\ 440$ watts

$EFF = Out/Inp \times 100$
$= 1\ 040,49/6\ 440 \times 100$
$= 16,15\%$

(2 × 3) (6)

5.3 5.3.1 V1/V2 = N1/N2
V1 = 15 × 380
= 5 700 volts

5.3.2 S = 1,73 × VL × IL
= 400 000/(1,73 × 380)
= 607,73 amps

(2 × 2) (4)

5.4

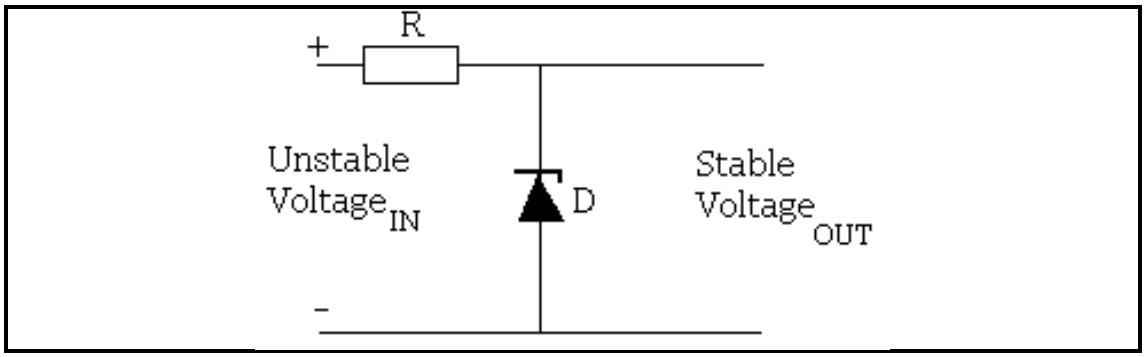

(3)

5.5 A bridge rectifier may be replaced with a centre tap and two diodes to achieve full-wave rectification. See the diagram below.

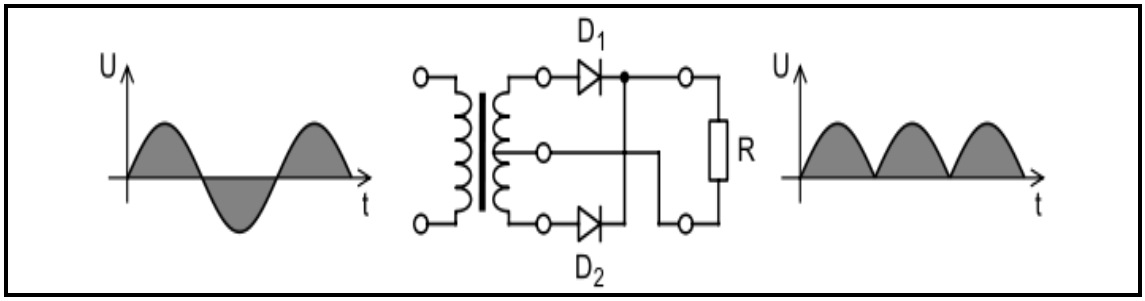

(3)

5.6 Short and open circuits (2)

5.7 Individual parts of engines and machines integrally connected with the complete machine in its normal operating condition, e.g. an electrical motor up to 15 kW (2)

[22]

TOTAL: 100

Copyright reserved