higher education & training

Department:
Higher Education and Training
REPUBLIC OF SOUTH AFRICA

MARKING GUIDELINE

NATIONAL CERTIFICATE

ARMATURE WINDING THEORY N2

1 AUGUST 2018

This marking guideline consists of 6 pages.

Copyright reserved

QUESTION 1

1.1
- Brush shifting
- Increasing field flux
- Installing interpoles
- Compensating winding (3 × 1) (3)

1.2 Carbon is softer and has a high melting point
Carbon has a negative temperature coefficient of resistance
Steel will wear out faster than the carbon
It has self-lubricating properties
It will acquire the shape of the commutator so it will ensure maximum contact with the commutator segment
Reduces wear of the commutator (3 x1) (3)

1.3

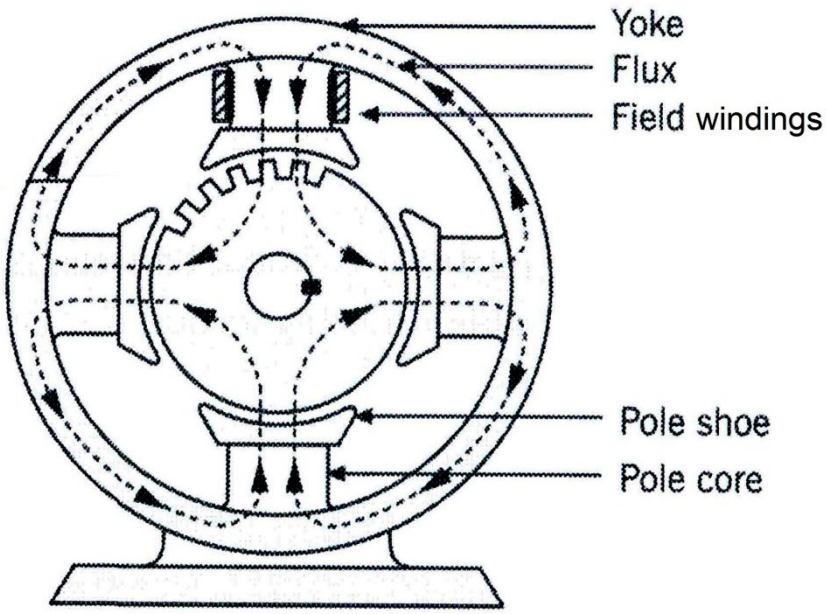

Correctness of diagram	3
Labels	5
Total	8

(8)

1.4 1.4.1 In a DC motor the commutator converts direct current✓ to alternating current✓ (2)

1.4.2 In a generator the commutator converts alternating✓ current to direct current.✓ (2)

[18]

QUESTION 2

2.1 2.1.1 $Z = \sqrt{R^2 + (XC - X_L)^2}$

$= \sqrt{12^2 + (45 - 30)^2}$✓

$= 19{,}2\ ohms$✓ (2)

2.1.2 $I = \frac{V}{Z}$

$= \frac{220}{19{,}2}$✓

$= 11{,}46\ A$✓ (2)

2.1.3 $V_{coil} = IZcoil$

$= 11{,}46 \times 32{,}3$✓

$= 370{,}2V$✓

BUT $Zcoil = \sqrt{R^2 + X_{L^2}}$

$= \sqrt{12^2 + 30^2}$✓

$= 32{,}3\ \Omega$✓ (4)

2.1.4 $Cos\theta = \frac{R}{Z}$

$= \frac{12}{19{,}2}$✓

$= 0{,}625$ leading✓ (2)

2.1.5 $P = VI\ cos\theta$

$= 220 \times 11{,}46 \times 0{,}625$✓

OR

$= 1{,}576\ kW$✓

$P = I^2\,R$

$= (11{,}46)^2 \times 12$✓

$= 1{,}576\ kW$✓ (2)

2.2 2.2.1 One

2.2.2 Unity power factor

(2 x 1) (2)

[14]

QUESTION 3

3.1 3.1.1 This technique is employed in small armatures✓ where each coil is physically wound✓ turn by turn✓ to the completed amount of turns.✓

3.1.2 A former is made to the size of the required(old) coil.✓ This is then mounted onto an electric coil winding machine✓ and the coil is pre-wound,✓ ready to be inserted as a coil into the coil slots.✓

3.1.3 This technique is employed where a coil is machine wound✓ double the size✓ of the original coil and slotted in tight at one end,✓ then twisted at the other end and inserted over into the slots.✓

(3 x 4) (12)

3.2
- With the slot linings cut and tucked over the coil
- With the slot left open, but subsequently covered with a strip of insulator
- With the slot closed with a hammered-in wedge and the insulation cut flush

(3 x1) (3)

3.3 Mica is used as an insulator with high tensile strength✓ that can withstand high temperature.✓ (2)

[17]

QUESTION 4

4.1 A squirrel-cage rotor is constructed of steel laminations✓ but the windings consist of conductor bars✓ fused to rings at either end✓ whereas a wound rotor has, as the name implies, three-phase windings in place of conductor bars✓ connected to slip rings✓ in star.✓ (6)

4.2
- Short-circuited coil
- Open-circuit coil
- Earthed coil (3 x 1) (3)

4.3 The most accurate method of determining coil turns is by physically counting✓ them individually.✓ (2)

4.4 The purpose of laminating the core is to reduce voltage loss✓due to eddy current✓ as the result we have more efficient transformer✓ (3)

4.5 To step up✓ or step down✓ voltage. (2)

4.6
- Air cooled✓ – open transformer, air cooled.✓
- Oil cooled✓ – three-phase oil cooled, with cooling fins and transformer oil✓ (4)

[20]

QUESTION 5

5.1
- Growler test
- Bar-to-bar test (2 x1) (2)

5.2
- Rope brake test
- Prony brake test
- Swinburne method
- Hopkinson method (4 x 1) (4)

5.3 Hold the thumb, index finger and middle finger at right angles to each other. ✓ Point the index finger in the direction of the main magnetic flux ✓and the middle finger in the direction of the current. ✓ The thumb then indicates the direction of the force exerted on the conductor. ✓ (4)

5.4
- When the ampere turns of the two windings oppose each other, the machine is differentially compounded.
- When the ampere turns of the two windings assist each other, the machine is cumulatively compounded. (2 x 1) (2)

[12]

QUESTION 6

6.1 When dismantling the motor, the non-drive-end is marked✓ with 2 penetrations✓ that must directly align to the stator✓ by a centre or prick punch✓
The drive end with is marked with1 penetration pop.✓
The non-drive end is dismantled or stripped first.✓ (6)

6.2
- The type of load
- Horizontal slip
- Heat/Temperature
- Maintenance and servicing intervals
- Thrust and torque (5 x 1) (5)

[11]

Copyright reserved

QUESTION 7

7.1
- Melinex
- Nomex melinex nomex
- Nomex (Any relevant 3 x 1) (3)

7.2
- Heat shrink sleeving are sleeves placed on ends of the high voltage terminals.
- They have electrical and mechanical insulating properties.
- A conductor cable is placed through a heat shrinking sleeve,
- the sleeve is heated by gas
- and it shrinks onto the cable. (5 x 1) (5)

[8]

TOTAL: 100

Copyright reserved