higher education & training

Department:
Higher Education and Training
REPUBLIC OF SOUTH AFRICA

MARKING GUIDELINE

NATIONAL CERTIFICATE

ARMATURE WINDING THEORY N2

6 APRIL 2018

This marking guideline consists of 7 pages.

Copyright reserved

QUESTION 1

1.1 1.1.1

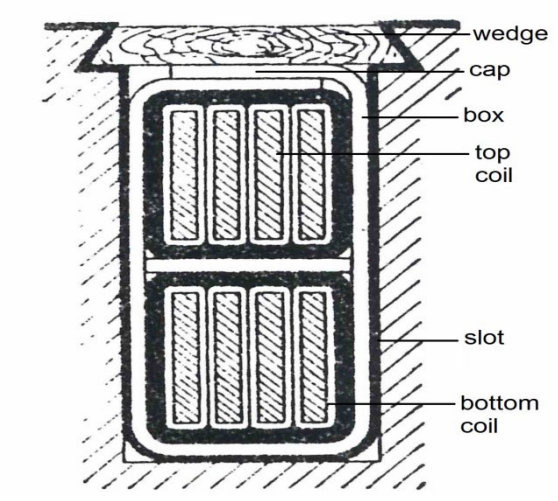

(5 × 2) (10)

1.1.2 Coil span = $\frac{\text{number of slots}}{\text{number of poles}}$

= 80/6✓

= 13,333✓

13 teeth may be taken to make it short-chorded. ✓ (3)

1.1.3 Commutator pitch = $\frac{\text{number of segments} \pm 1}{\text{number of pairs of poles}}$

= $\frac{320 + 1}{3}$✓

= 107 segments✓ (progressive) ✓ (3)

1.2 Armature reaction is the distortion of the main flux✓ entering and leaving the armature✓ caused by the flux set up by the armature when they carry current.✓ (3)

[19]

QUESTION 2

2.1

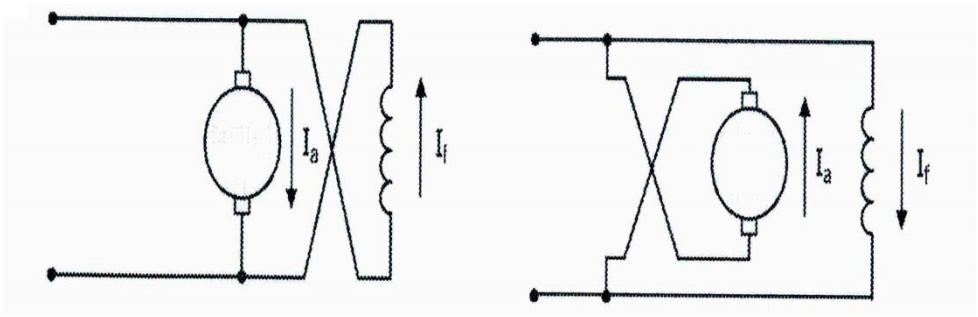

(TWO marks for each diagram and ONE mark for each labelling) (6)

2.2

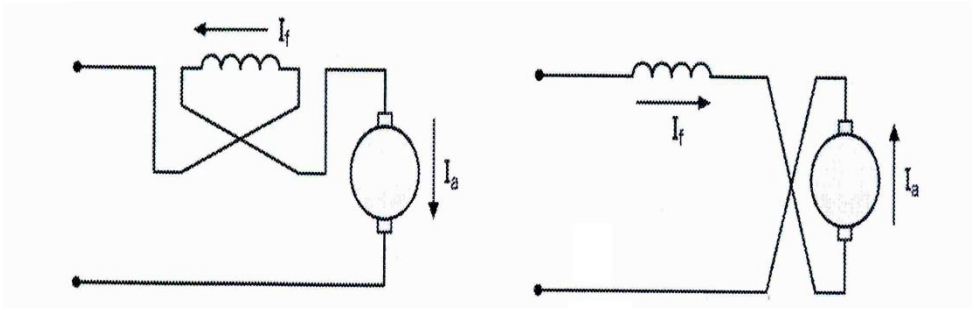

(TWO marks for each diagram and ONE mark for each labelling) (6)

2.3

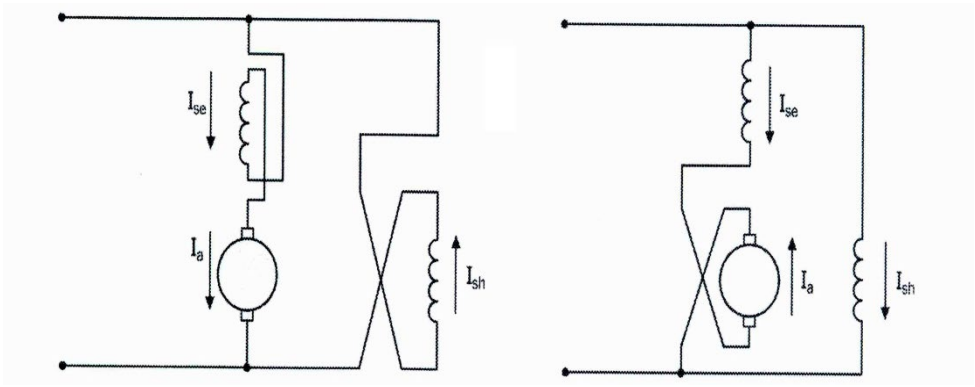

(THREE marks for each diagram and ONE mark for each labelling) (8)
[20]

QUESTION 3

3.1 (a) $X_L = 2 \pi f L$
$= 2 \pi . 100 . 0, 01$✓
$= 6, 28$ ohms✓

(b) $X_C = 1/2 \pi f c$
$= 1/2.\pi.75 \times 10^{-6}$✓
$= 21,22$ ohms✓

(c) $Z = \sqrt{R^2 + (X_C - X_L)^2}$

$= \sqrt{R^2 + (21,22 - 6.28)^2}$✓
$= 15,75$ ohms✓

(d) $I = \frac{V}{Z}$
$= 200/ 15,75$✓
$= 12,7$ A✓

(8)

3.2 $\Theta = \text{Cos}^{-1} \frac{R}{Z}$
$= \text{Cos}^{-1} \frac{5}{15,75}$✓
$= 71,5^\circ$ leading✓ (2)

3.3 (a) $V_R = I.R$
$= 12,7 \times 5$✓
$= 63,5$ V✓

(b) $V_L = I.X_L$
$= 12,7 \times 6,28$✓
$= 79,76$ V✓

(c) $V_c = I.X_C$
$= 12,7 \times 21,22$✓
$= 269,5$ V✓

(6)
[16]

QUESTION 4

4.1 After a certain speed of about 75%,✓ the centrifugal switch opens,✓ disconnecting the starting windings from the circuit.✓ (3)

4.2

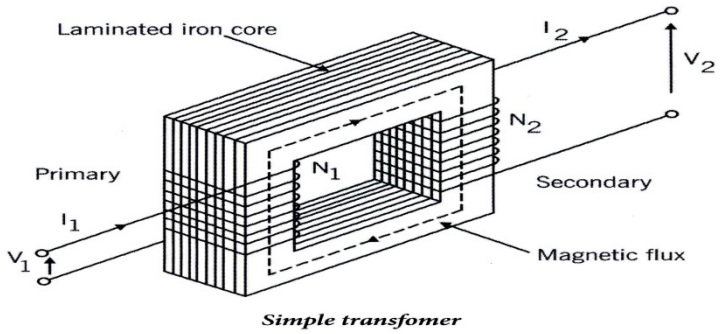

Simple transfomer

(4)

4.3 A transformer is 97% efficient. (1)

4.4 4.4.1 $V_{ph1} = V_L 1$
$= 6\ 600\ V$✓

$V_{ph2} = V_L 2/\sqrt{3}$

$= 380/\sqrt{3}$✓
$= 220\ V$✓ (3)

4.4.2 $\frac{N1}{N2} = \frac{V_1}{V_2}$ NB PHASE VALUES ✓

$= \frac{6\ 600}{220}$✓

$= 30 : 1$✓ (3)

4.4.3 $\frac{V1}{V2} = \frac{I_1}{I_2}$ NB PHASE VALUES✓

Therefore $I_1 = I_2 \times \frac{V_1}{V_2}$
$= 900 \times \frac{220}{6\ 000}$ ✓
$= 30\ A\ (I_{ph1})$✓

In delta $I_L = \sqrt{3}\ I_{ph1}$✓

$= \sqrt{3} \times 30$✓
$= 51,96\ A$✓ (6)
[20]

QUESTION 5

5.1

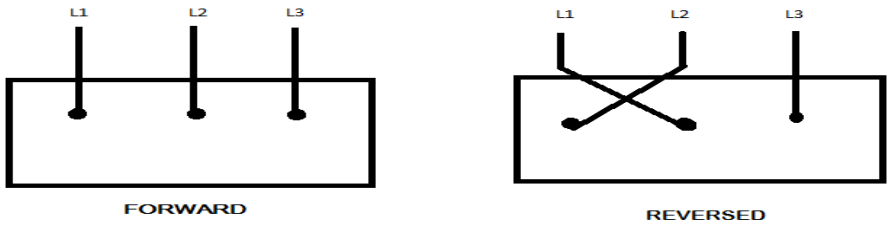

(ONE mark for each diagram and TWO marks for each labelling) (6)

5.2 The currents through each of the 3 stator windings in a three-phase motor differ in phase by a 3rd of a cycle (120°).✓ A pulsating magnetic field is set up by each of these windings.✓ Since each magnetic field follows after the next✓ they combine to set up a resultant field which moves around the stator at a constant speed.✓ (4)

[10]

QUESTION 6

Job No. …..Customer……
kW ……. …volts…….amperes……..r/min…….Type…...✓
Serial No. ……Make…….
Kind of winding……Amount of end room (a)……..
Turns per coil……..Coil pitch……..No. of slots……
No. of commutator bars…… Wires per bar……✓
Of wire used in coils……Location of bottom lead by considering✓ coil in bottom of slot as slot No.1 and then giving bar to which it is connected (show on DIAGRAM below also)……✓ Distance commutator is pressed on shaft……Markings on shaft or armature core……...
Bands…✓

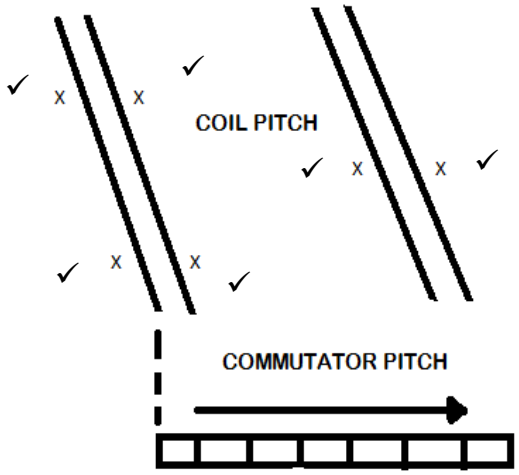

[11]

QUESTION 7

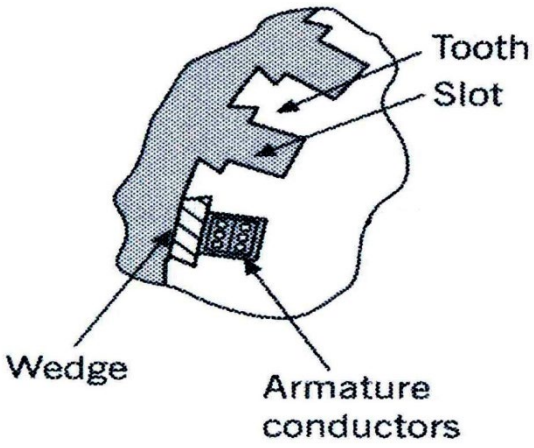

(TWO marks for labels and TWO marks for diagrams) **[4]**

TOTAL: 100

Copyright reserved