higher education & training

Department:
Higher Education and Training
REPUBLIC OF SOUTH AFRICA

MARKING GUIDELINE

NATIONAL CERTIFICATE

ARMATURE WINDING N2

15 April 2021

This marking guideline consists of 6 pages.

Copyright reserved

QUESTION 1

1.1 Lap and wave windings (2)

1.2

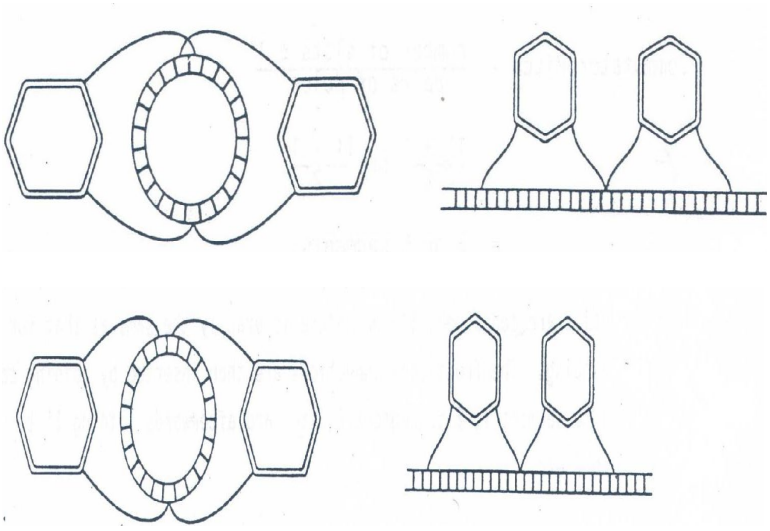

(4)

1.3 The purpose of an overload coil is to trip whenever the current exceeds the predetermined value of the circuit. (3)

1.4 When a conductor cuts a magnetic flux, an EMF is generated in the conductor and the magnitude of the generated EMF is proportional to the rate at which the conductor cuts the magnetic flux. (3)

1.5

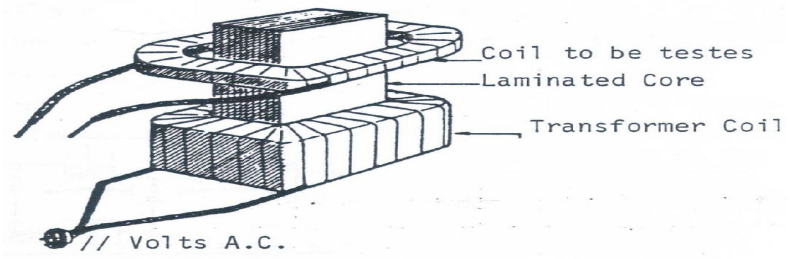

(4)

1.6

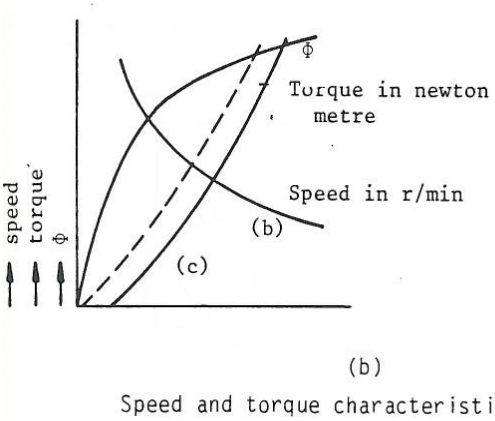

(b)

Speed and torque characteristics

(4)

1.7 Use interpole coils, shift the brushes, use compensation windings. (2)

[22]

Copyright reserved

QUESTION 2

2.1

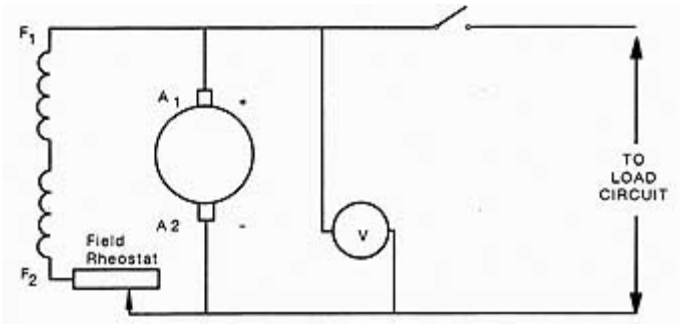

(6)

2.2 The operating speed and the brush grade and the voltage (2)

2.3 2.3.1 $Z = \frac{E \times 60 \times C}{2PN\phi}$

$= \frac{800 \times 60 \times 8}{2 \times 4 \times 480 \times 0{,}888}$

= 112,61 conductors

= conductors/slot 112,61/55

= 2 conductors per slot (4)

2.3.2 $T = \frac{2PI\phi}{C\pi}$

$= \frac{2 \times 4 \times 80 \times 0{,}888}{8 \times \pi}$

= 22,61 Nm (4)

2.4

2.4.1 E = V+ IR
= 220 + (1,8 x 10)
= 238 V (2)

2.4.2 E = V- IR
= 220 - (1, 8 x 10)
= 202 V (2)

[20]

QUESTION 3

3.1

DATA SHEET FOR SPLIT PHASE MOTOR

Make

Kilowatt	rotational frequency	volts	amperes
Cycle	Type	Frame	Style
Temperature	Model	Serial	Phase
No. of Poles		No. of Slots	

Winding	Size Wire	No. of Circuits	Pitch	Turns
Running				
Starting				

Slot No.	1	2	3	4	5	6	7	8	9	10	11	12	13	14	15	16	17	18	19	20	21	22
Running																						
Starting																						

Rotation Clockwise Counter Clockwise

(10)

3.2
- Insulation resistance to earth
- Ductor test (Low voltage resistance test)
- Voltage drop test
- Growler test

(4)

3.3 3.3.1 All openings are covered by mesh screens to keep out vermin and large objects, but do not seriously interfere with the ventilation of a motor.

3.3.2 The openings are covered and protected by cowls which prevents the ingress of dripping moisture, suitable for very damp conditions.

3.3.3 With pedestal bearings and no screening or protection of moving parts, which is only suitable for where machines are not accessible to unskilled personnel.

(3 × 2) (6)
[20]

QUESTION 4

4.1 4.1.1 $XL = 2\pi FL$
$= 2 \times \pi \times 50 \times 0,025$
$= 7,85\ \Omega$ (2)

4.1.2 $Z = \sqrt{R^2 + XL^2}$
$= \sqrt{20^2 + 7,85^2}$
$= 21,48\ \Omega$ (2)

4.1.3 $I = V/Z$
$= 200/21,48$
$= 9,31\ A$ (2)

4.1.4 $\Theta = \cos^{-1}(20/21,48)$
$= 35,21^{\circ}$ (2)

4.1.5 $VR = I \times R = 9,31 \times 20 = 186,2\ V$
$VL = I \times XL = 9,31 \times 7,85 = 73,18\ V$ (4)

4.2

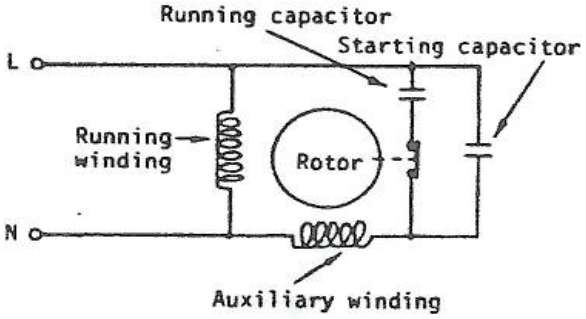

(4)

4.3
- Oil-filled capacitor
- Electrolytic capacitor (2)

4.4 The purpose is to disengage the starting winding and switch on the running winding once the motor reaches 75% of its nominal speed. (2)
[20]

QUESTION 5

5.1

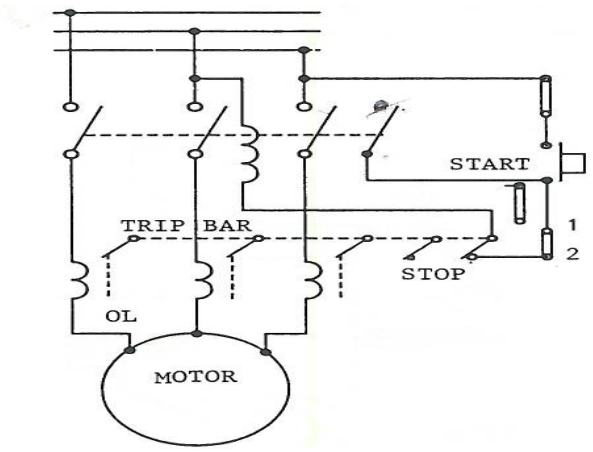

(5)

5.2 One should switch any two lines, L1 and L2 or L1 and L3, and then the motor will change the direction of rotation. (2)

5.3

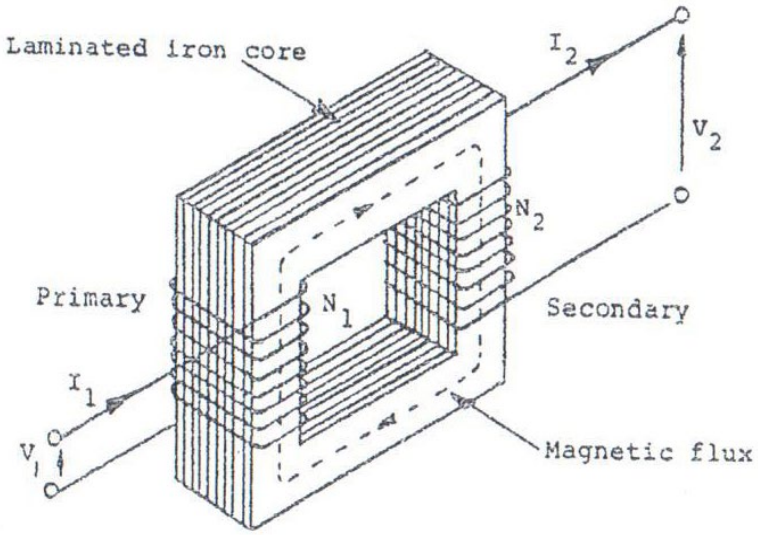

(3)

5.4 An eddy current is a local electrical current induced in a conductive material by the magnetic field produced by the active coil. This local electric current in turn induces a magnetic field opposite in sense to the one by the magnetic field produced by the active coil. This local electrical current in turn induces a magnetic field opposite to the one from the active coil and reduces the inductance in the coil. When the distance between the target and the probe changes, the impedance can be detected by a carefully arranged bridge circuit.

(2)

5.5 5.5.1 $N2 = \frac{V2\ N1}{V1}$

$= \frac{600 \times 16}{220}$

= 44 turns

5.5.2 $I1 = \frac{I2 \times V2}{V1}$

$= \frac{5 \times 16}{220}$

= 0,36 A

5.5.3 S = VI

= 16 x 5

= 80 A

(3 × 2) (6)
[18]

TOTAL: 100