higher education & training

Department:
Higher Education and Training
REPUBLIC OF SOUTH AFRICA

NATIONAL CERTIFICATE

AIRCRAFT MAINTENANCE THEORY N2

(11041102)

10 August 2021 (X-paper)
09:00–12:00

Drawing instruments may be used.

This question paper consists of 7 pages.

233Q1G2110

Copyright reserved

DEPARTMENT OF HIGHER EDUCATION AND TRAINING
REPUBLIC OF SOUTH AFRICA

NATIONAL CERTIFICATE
AIRCRAFT MAINTENANCE THEORY N2
TIME: 3 HOURS
MARKS: 100

INSTRUCTIONS AND INFORMATION

1. Answer all the questions.
2. Read all the questions carefully.
3. Number the answers according to the numbering system used in this question paper.
4. Start each question on a new page.
5. Use only a blue or black pen.
6. Write neatly and legibly.
7. Drawings must be neat, properly labelled, at least half a page in size and drawn with a pencil.

Copyright reserved

QUESTION 1

1.1 What is the purpose of using an aerofoil shaped wing instead of a flat rectangular shaped one? (2)

1.2 What does *angle of attack* refer to? (2)

1.3 At the wing tips, vortices are formed at high speed.

In which direction do these vortices rotate at each wing tip when viewed from behind the aircraft? (2)

1.4 Define the term *stress* with reference to metals used on aircraft, and give its unit. (2)

1.5 Explain what stresses will be encountered on the top, bottom and attachment surface areas of the wing of an aircraft during straight and level flight. (6)

1.6 Name THREE components that can be found in the power circuit of a hydraulic system. (3)

1.7 Hydraulic systems use oil as their medium for operation.

What medium is used for operation of the pneumatic system? (1)

1.8 Study FIGURE 1 below, which is a drawing of a heat exchanger used in aircraft air conditioning systems, and answer the questions.

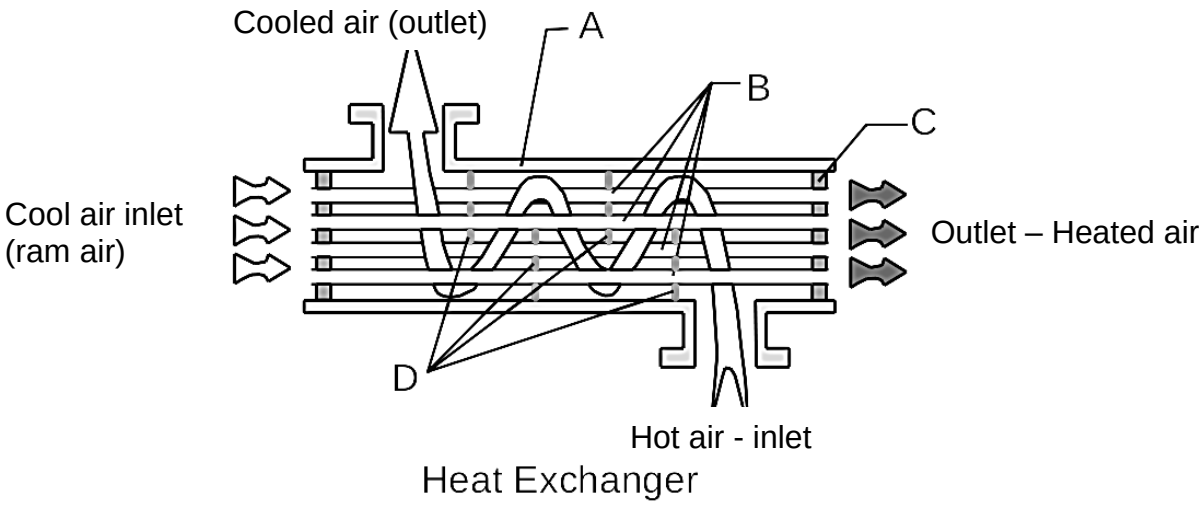

FIGURE 1

1.8.1 Label the different parts (A–D) indicated in FIGURE 1. Write only the answer next to the letter (A–D) in the ANSWER BOOK. (4)

1.8.2 What is the purpose of this component (heat exchanger)? (2)

[24]

Copyright reserved

QUESTION 2

2.1 Make a neat, labelled drawing of a cut-through view of an electrical windshield anti-icing system for any transport aircraft. (5)

2.2 Where can an aircraft technician find the correct location of the datum of an aircraft for symmetry checking purposes? (1)

2.3 Explain how an incidence check is done on a large commercial transport aircraft. (5)

2.4 Describe TWO checks that have to be done after flying control system rigging has been completed. (2)

2.5 When is it necessary to carry out normalising on steel? (2)

2.6 When heat treatment is done on aluminium and aluminium alloys, a salt bath can be used instead of a hot air furnace.

What are chemicals are used to prepare a salt bath? (2)
[17]

QUESTION 3

3.1 Answer the following questions relating to galvanic corrosion:

3.1.1 Explain what causes it to occur on aircraft parts. (3)

3.1.2 How can it be prevented? (3)

3.2 Name TWO forms of deterioration that may be found on plastic materials used on aircrafts. (2)

3.3 What does *octane rating* of a fuel refer to? (2)

3.4 FIGURE 2 shows a multigrade oil used in aircraft engines that are graded and identified by a code (e.g., W15W-50).

What does the 'W' stand for in the code that is pointed to in the illustration?



FIGURE 2 (1)

3.5 Fuel injection systems have become common on aircraft piston engines because of their advantages. However, they also have disadvantages.

Give FOUR disadvantages of a fuel injection system. (4)

3.6 Explain the purpose of a fuel control unit as used in gas turbine engines. (2)

3.7 FIGURE 3 shows a centrifugal compressor used on superchargers.

Describe the purpose of the impeller and diffuser seen in the illustration.

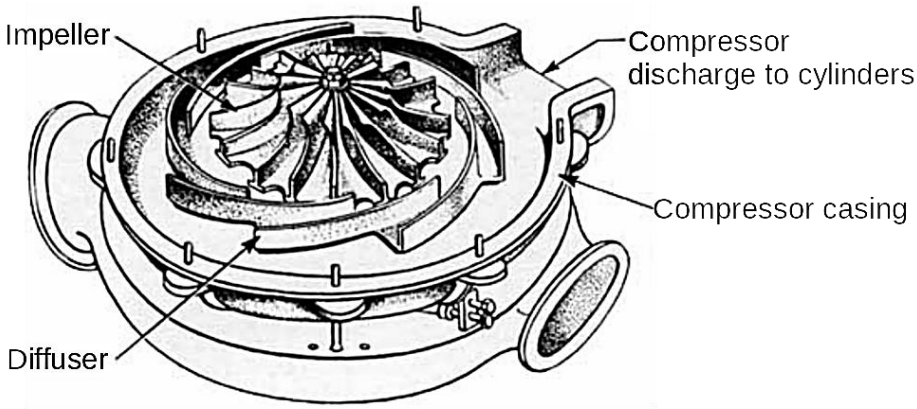

Supercharger compressor

FIGURE 3 (4)
[21]

QUESTION 4

4.1 Explain *the function of a reverse pitch propeller* and what it is used for. (4)

4.2 What does the abbreviation IHP stand for and how is it calculated? (2)

4.3 Name TWO design factors that have to be taken into account by the designers of all types of engines. (2)

4.4 The exterior surface of the wing of an aircraft has to be inspected during a minor inspection.

What defects would be looked for during the inspection of the wing? (4)
[12]

Copyright reserved

QUESTION 5

5.1 Draw a neat, labelled diagram in graph form to show how humidity affects the performance of a gas turbine. (2)

5.2 Refer to FIGURE 4 below, which is an illustration of the compressor section of a gas turbine engine. Identify the THREE components in the illustration. Write only the answer next to the letter (A–C) in the ANSWER BOOK.

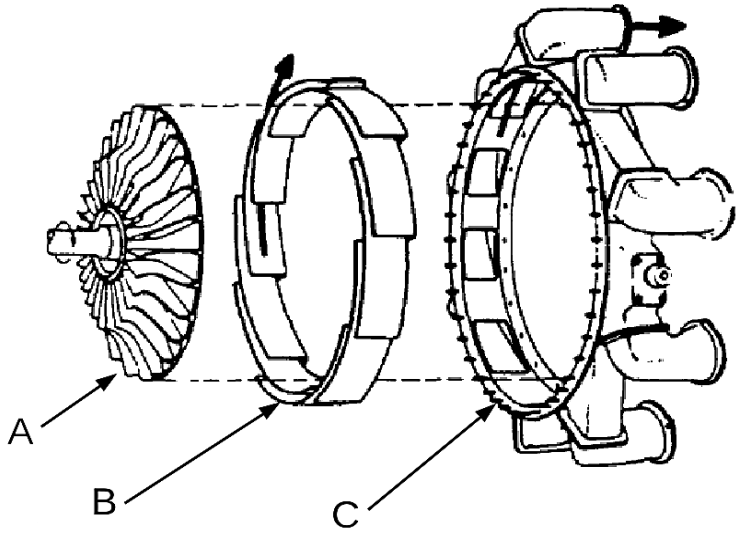

FIGURE 4 (3)

5.3 Study FIGURE 5 below, which illustrates a combustion chamber of a gas turbine engine, and answer the questions:

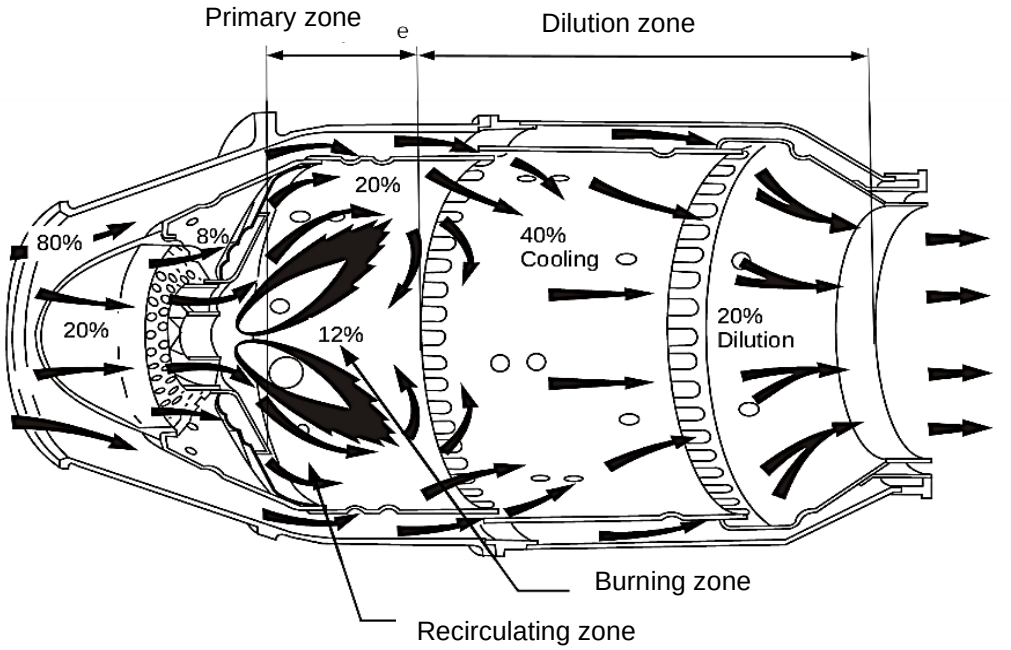

FIGURE 5

5.3.1 Explain the function of the combustion chambers. (3)

5.3.2 Name any FOUR components a typical combustion chamber like the one illustrated in FIGURE 5 can consist of. (4)

Copyright reserved

5.4 The turbine of a gas turbine engine transforms a portion of the kinetic energy of the exhaust gases into mechanical energy to drive the compressor and accessories.

Name the TWO parts a typical turbine consists of. (2)
[14]

QUESTION 6

Refer to FIGURE 6 below, which is a diagram of a helicopter, and answer the questions:

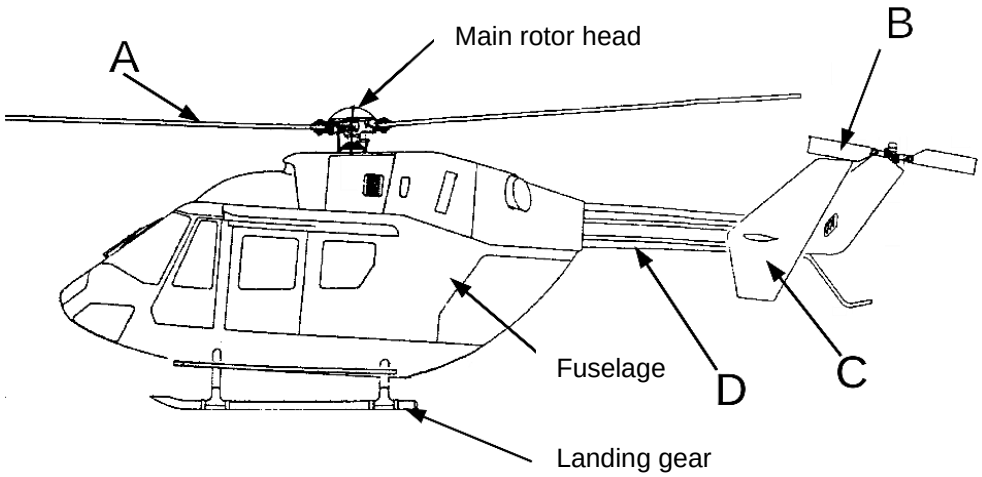

Components of a helicopter

FIGURE 6

6.1 Label the different parts (A–D) indicated in FIGURE 6. Write only the answer next to the letter (A–D) in the ANSWER BOOK. (4)

6.2 Explain the function of each of the labelled components. (4 × 2) (8)
[12]

TOTAL: 100

Copyright reserved