higher education & training

Department:
Higher Education and Training
REPUBLIC OF SOUTH AFRICA

MARKING GUIDELINE

NATIONAL CERTIFICATE

AIRCRAFT MAINTENANCE THEORY N2

10 August 2021

This marking guideline consists of 8 pages.

Copyright reserved

QUESTION 1

1.1 The aerofoil causes a greater decrease of pressure,✓ thus improving the lift, and it causes less drag because the smoother airflow reduces eddies.✓ (2)

1.2 It is the angle formed between the chord line✓ and the relative airflow.✓ (2)

1.3
- The right-hand (starboard) wing rotates anti-clockwise.
- The left-hand (port) wing rotates clockwise. (2)

1.4 Stress is the force or load a material or structure has to bear.✓ It is measured in force per unit area.✓ (2)

1.5 In flight, the lift forces acting on the wings will bend the wings upwards towards the tips due to the weight of the fuselage on the centre section. This will cause the following:

- Tension stress on the bottom surface of the wing.
- Compression stress on the top surface of the wing – the rivets on the skin being under shear stress.
- A shear force and a bending moment are also present, both of which are at their highest values at the point where the wing meets the fuselage.

(3 × 2) (6)

1.6
- Pressure pump
- Pressure relief valve
- Selector valves
- Actuators/jacks
- Accumulators
- Pressure regulator (Any 3 × 1) (3)

1.7 Air (1)

1.8 1.8.1 A Cylindrical casing
B Cooling air tubes
C Bulkhead
D Baffles (4)

1.8.2 A heat exchanger is a device that allows heat from a fluid (hot air) to pass to a second fluid (cold air)✓ without the two fluids having to mix together or come into direct contact.✓ (2)

[24]

Copyright reserved

QUESTION 2

2.1

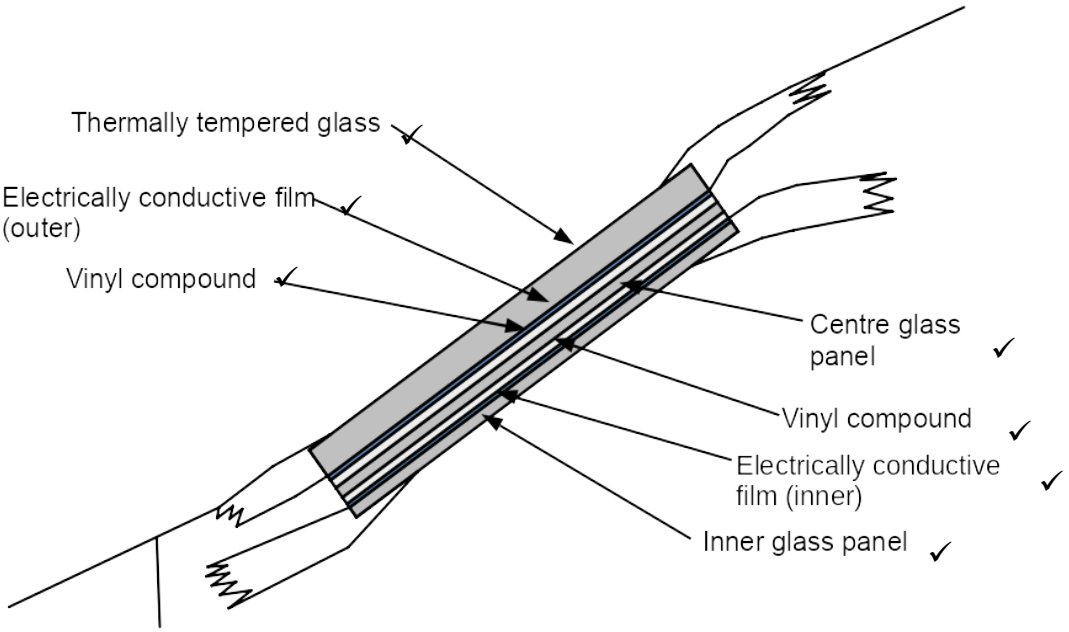

Electrical windshield ant-icing

(5 × 1) (5)

2.2
- It is identified in the aircraft specifications.
- Type certificate data sheet.
- Maintenance manual/service manual. (Any 1 × 1) (1)

2.3
- The incidence angle is usually checked in at least two positions on the surface of the wing to ensure that they are free from twist, by using the incidence boards specified for the aircraft type provided by the manufacturer.
- On certain aeroplanes the main plane of incidence must be checked in more than one position and will therefore have more than one board and position to check.
- Place the boards on the wings and horizontal stabilisers in the positions specified in the maintenance manual, usually on two of the spars.
- Ensure that the boards are resting on the wings correctly with their stop against the leading edge of the wing.
- Check that the bubble of the spirit level is central. (5)

2.4
- All work has been completed.
- All components that required removal have been re-installed.
- All control system components that require lockings are safe.
- All loose articles have been removed.
- All tools and equipment have been removed.
- There is no visible damage to system components caused by the rigging procedure. (2 × 1) (2)

Copyright reserved

2.5 Normalising is necessary to release strains in the crystal structure of steel✓ caused by cold working (e.g., machining, forging, bending, welding, etc.).✓ (2)

2.6
- Sodium nitrate
- Potassium nitrate
- A combination of sodium nitrate and potassium nitrate. (Any 2 × 1) (2)

[17]

QUESTION 3

3.1 3.1.1
- Electrochemically dissimilar metals must be present.
- The metals must be in electrical contact.
- The metals must be exposed to an electrolyte.
- Metals are separated on the galvanic table (potential difference exists). (Any 3 × 1) (3)

3.1.2
- By choosing the right type of metals.
- Insulate materials from one another.
- Apply suitable coatings and keep the coatings intact. (3)

3.2
- Blistering
- Blooming
- Brittleness
- Cracking
- Crazing
- Crumbling
- De-laminating
- Discolouration
- Fraying
- Warping
- Weeping (Any 2 × 1) (2)

3.3 Gasoline is rated for engine fuel purposes according to its anti-knock or anti-detonation value. This value is expressed in terms of an octane number.✓ A fuel's octane rating is a measure of its resistance to spontaneous combustion or detonation.✓ (2)

3.4 The 'W' stands for WINTER, not WEIGHT, as commonly misunderstood. (1)

3.5
- It is very expensive compared to other methods.
- Possible vapour lock in the steel fuel lines above the engine, making it difficult to start a hot engine.
- Fuel must be cleaner due to very fine tolerances of the parts.
- There is also a need for fuel return lines to the tank in use, or a separate header tank.
- Vapour locks can form during ground operations on hot days.
- Difficulty with restarting an engine that quits because of fuel starvation.
- Many more complex components, so more things can fail.
- Higher vulnerability to heat/electrical damage. (Any 4 × 1) (4)

Copyright reserved

3.6 Fuel control unit schedules fuel flow to the engine combustion chamber automatically,✓ providing fuel flow as dictated by the operating conditions of the engine.✓ (2)

3.7 Impeller – the purpose of the impeller is to give the incoming air high velocity✓ as it travels outward towards the diffuser.✓
Diffuser – the purpose of the diffuser vanes is to direct the airflow✓ as it leaves the impeller and also to convert the high velocity of the air to high pressure.✓
(2 × 2) (4)
[21]

QUESTION 4

4.1
- A reverse pitch propeller is a controllable pitch propeller in which the blade angles can be changed to a negative value during operation.✓
- Reversible propellers push air forwards, producing a high negative thrust against the oncoming air,✓ which creates a braking effect at low speed by using engine power.✓
- This is used on the ground during landing, reducing the required landing ground roll as well as reducing wear on tires and brakes.✓ (4)

4.2 Indicated horsepower (IHP) is the theoretical power of a reciprocating engine if it is completely frictionless in converting the expanding gas energy (piston pressure × displacement) in the cylinders.✓ It is calculated from the pressures developed in the cylinders, measured by a device called an engine indicator – hence indicated horsepower.✓ (2)

4.3 Piston engine
- Engine weight
- Piston displacement
- Area of piston
- Compression ratio
- Type of fuel management system to be used
- Induction system – with or without supercharger or turbocharger
- Supercharger or turbocharger size
- Type and size of bearings to be used

Gas turbine engine
- Engine weight
- Shape and size of all the blades
- Weight of all the blades
- Shape and size of the air inlet
- Type of compressor to be used
- Combustion chamber type
- Shape and size of the combustion chambers
- Shape and size of the burner injectors
- Type of fuel management system to be used
- Type of materials to be used
- Type and size of bearings to be used

Copyright reserved

- Shape and size of the exhaust and exhaust cone
- Pressure ratio of the compressor (Any 2 × 1) (2)

4.4
- Loose or popped rivets
- Cracks
- Distortion
- Signs of fuel leakage along riveted seams
- Loose panels and screws
- Skin wrinkling (Any 4 × 1) (4)

[12]

QUESTION 5

5.1

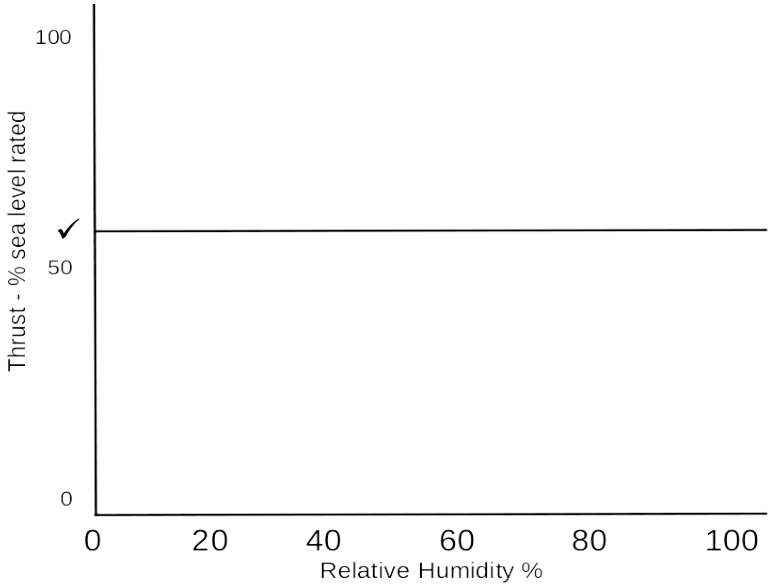

Effect of humidity✓on thrust output (2)

5.2 A Compressor impeller
B Diffuser
C Compressor manifold/compressor casing (3)

5.3 5.3.1 The primary function of the combustion section is to burn the fuel-air mixture✓ in order to convert the energy stored in the fuel✓ to heat energy.✓ (3)

5.3.2
- Air casing
- Expansion head
- Flame tube/liners
- Snout
- Baffles
- Swirler/swirl vanes
- Burner
- Interconnectors
- Igniters (Any 4 × 1) (4)

5.4
- Turbine wheel/blades
- Nozzle guide vanes (2)

[14]

QUESTION 6

6.1 A Main rotor
B Tail rotor
C Vertical stabiliser
D Tail boom (4)

6.2
- A – Main rotor
  The spinning main rotor creates lift, similar to a wing, and accelerates the airflow downwards.✓ It is used to generate both the aerodynamic lift force that supports the weight of the helicopter, and thrust, which counteracts aerodynamic drag in forward flight and produces reaction torque.✓
- B – Tail rotor
  The tail rotor compensates for torque induced by the powered turning of the main rotor.✓ It produces thrust perpendicular to the helicopter's body to counteract the torque force produced by the main rotor. By changing the pitch, directional control can be maintained.✓
- C – Vertical stabiliser
  The vertical stabiliser is also part of the aerofoil section and is normally mounted vertically on the tail boom✓ to provide directional stability.✓
- D – Tail boom
  The tail boom supports the tail rotor drive shaft, and forms a mounting place for the stabilisers.✓ The (lever) length determines the size of the thrust needed for counteracting the torque.✓

(4 × 2) (8)

[12]

TOTAL: 100

Copyright reserved