higher education & training

Department:
Higher Education and Training
REPUBLIC OF SOUTH AFRICA

T10**(E)**(A2)T

NATIONAL CERTIFICATE

AIRCRAFT MAINTENANCE THEORY N2

(11041102)

2 August 2018 (X-Paper)
09:00–12:00

This question paper consists of 8 pages.

Copyright reserved

DEPARTMENT OF HIGHER EDUCATION AND TRAINING
REPUBLIC OF SOUTH AFRICA

NATIONAL CERTIFICATE
AIRCRAFT MAINTENANCE THEORY N2
TIME: 3 HOURS
MARKS: 100

INSTRUCTIONS AND INFORMATION

1. Answer ALL the questions.
2. Read ALL the questions carefully.
3. Number the answers according to the numbering system used in this question paper.
4. Sketches must be large, neat and fully labelled.
5. Write neatly and legibly.

Copyright reserved

QUESTION 1

1 Various options are given as possible answers to the following questions. Choose the answer and write only the letter (A–C) next to the question number (1.1–1.5) in the ANSWER BOOK.

1.1 Induced drag is the result of ...

A poor wing surface finish.
B differential pressure acting over and under the wing.
C flying at speeds that are too high for the design of the wing.

1.2 Hardening is a heat treatment process applied to ... to produce maximum hardness in the material and to make it more resistant to wear by abrasion.

A steel
B aluminium
C both steel and aluminium

1.3 Viscosity is defined as ...

A the ability of an oil to resist forming sludge.
B the degree of an oil's resistance to flow.
C a comparison between the weight of a substance and the weight of an equal volume of distilled water at a specified temperature.

1.4 Flashpoint is defined as ...

A the temperature at which the wax content, normally held in solution, begins to solidify and separate into tiny crystals, causing the oil to appear cloudy or hazy.
B the temperature at which the oil vapour momentarily ignites when a flame is periodically passed slowly over the surface of the oil.
C the temperature at which the oil ceases to flow when held horizontal for 5 seconds.

1.5 The Saybolt viscosimeter is used to measure the viscosity of oil. During the test ... of oil is passed through the meter at 37 °C.

A 60 cubic centimetres
B 90 cubic centimetres
C 120 cubic centimetres

(5 × 1) **[5]**

Copyright reserved

QUESTION 2

2.1 Explain TWO advantages of an aerofoil over a flat plate. (2)

2.2 Describe how camber relates to an aircraft wing and what effect it has on lift. (3)

2.3 Refer to FIGURE 1 below and answer the questions.

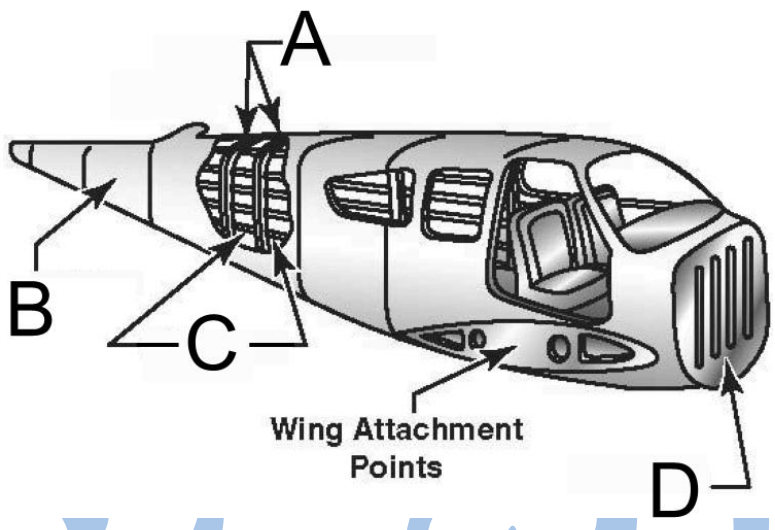

FIGURE 1

2.3.1 Label the different parts (A–D) as indicated. Write only the answer next to the letter (A–D) in the ANSWER BOOK. (4)

2.3.2 Name the type of fuselage construction illustrated in FIGURE 1. (1)

2.4 After adjustment of the flying control system certain checks must be completed to ensure the safety of the system.

Explain any FIVE checks that will be required. (5)

2.5 Explain the purpose of tempering as it is applied to steel. (2)

2.6 What is the cause of stress corrosion? (2)

2.7 Describe how you would treat an aircraft part that has deteriorated due to stress corrosion. (3)

[22]

QUESTION 3

3.1 Refer to FIGURE 2 below illustrating one of the types of hydraulic system accumulators. Label the different parts (A–D) as indicated. Write only the answer next to the letter (A–D) in the ANSWER BOOK.

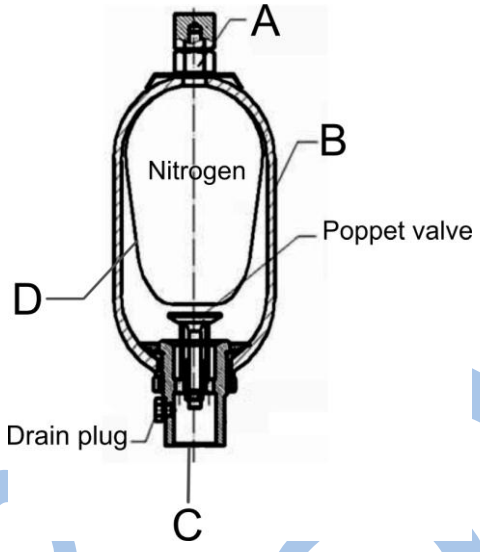

FIGURE 2 (4)

3.2 Describe the purpose of the pressure regulator that is required in aircraft hydraulic systems. (2)

3.3 The air production and distribution system of a basic pneumatic system is illustrated in FIGURE 3 below.

Explain the purpose of the component that is circled.

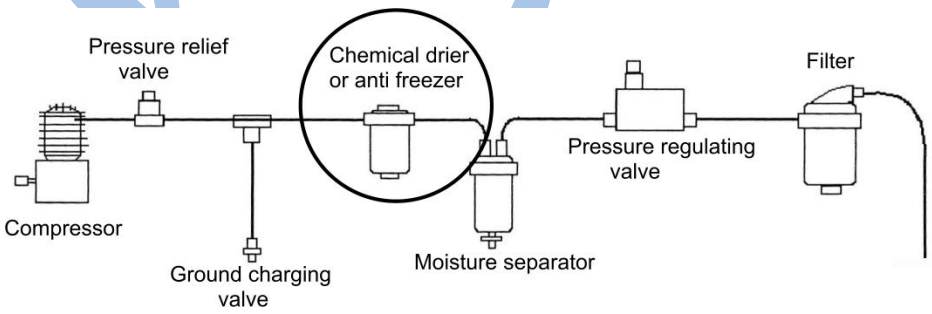

FIGURE 3 (2)

3.4 All aircraft pneumatic systems are equipped with air bottles.

Explain the purpose of these bottles. (2)

3.5 One of the components of the pressurisation system is an outflow valve.

What is the function of this component? (2)

Copyright reserved

3.6 Refer to FIGURE 4 below illustrating an exhaust heat exchanger and answer the questions.

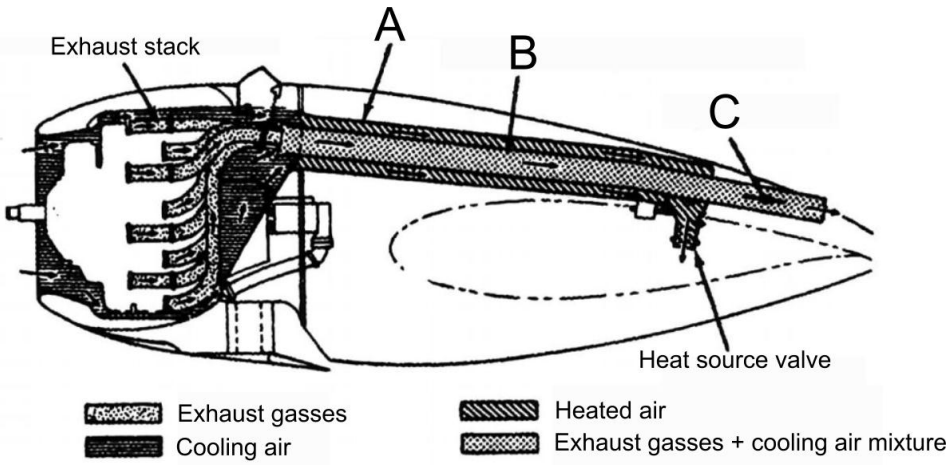

FIGURE 4

3.6.1 Label the different parts (A–C) as indicated. Write only the answer next to the letter (A–C) in the ANSWER BOOK. (3)

3.6.2 Describe how the exhaust heat exchanger illustrated in FIGURE 4 above functions. (6)
[21]

QUESTION 4

4.1 A typical gas turbine engine consists of different sections.

What are the main and auxiliary functions of the accessory section? (7)

4.2 Draw a neat, labelled diagram to illustrate a can-annular combustion chamber system. (3)

4.3 The typical turboprop engine can be broken down into four assemblies.

Explain these FOUR assemblies that will function together during operation of the engine. (4)

4.4 Pre-ignition is a condition that affects aircraft piston engines running on Avgas.

Describe what is understood when referring to pre-ignition. (2)

4.5 Refer to FIGURE 5 below illustrating a direct fuel injection system and answer the questions.

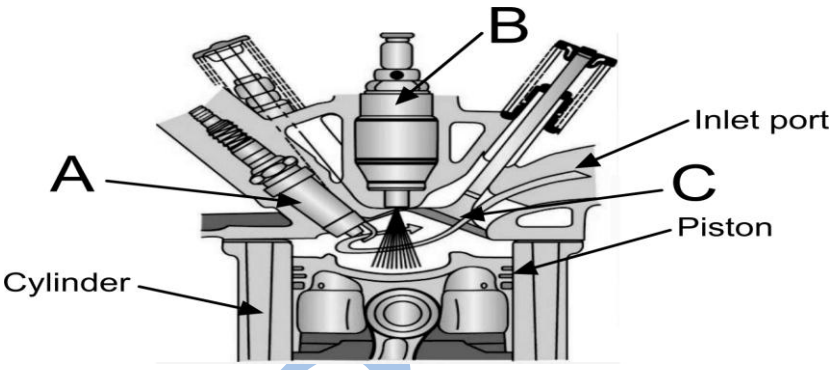

FIGURE 5

4.5.1 Label the different parts (A–C) as indicated. Write only the answer next to the letter (A–C) in the ANSWER BOOK. (3)

4.5.2 What is the purpose of the component labelled B? (2)

4.6 Name ONE purpose of an engine driven supercharger. (1)

4.7 Name any TWO different types of altitude superchargers. (2)
[24]

QUESTION 5

5.1 Summarise the purpose of any type of propeller and explain how it produces thrust. (4)

5.2 Explain the difference between indicated horsepower and brake horsepower. (4)

5.3 The acceleration check is one of the checks on a piston engine to test if the engine is functioning correctly.

Give a summary of this check during a ground run test. (7)

5.4 During a minor inspection the cabin and cockpit group will be inspected.

Explain the inspection of the following:

5.4.1 Seats and safety belts (1)

5.4.2 Windows and windshields (1)

5.4.3 Instruments (2)
[19]

Copyright reserved

QUESTION 6

6.1 Describe the effect that altitude has on gas turbine engine performance. (4)

6.2 Discuss the differences between a gyroplane and a helicopter with regards to each one's take-off and landing performance. (3)

6.3 Define the term *tip path plane*. (2)
[9]

TOTAL: 100

Copyright reserved