higher education & training

Department:
Higher Education and Training
REPUBLIC OF SOUTH AFRICA

T10**(E)**(A9)T

NATIONAL CERTIFICATE

AIRCRAFT MAINTENANCE THEORY N2

(11041102)

9 April 2019 (X-Paper)
09:00–12:00

This question paper consists of 7 pages.

Copyright reserved

DEPARTMENT OF HIGHER EDUCATION AND TRAINING
REPUBLIC OF SOUTH AFRICA

NATIONAL CERTIFICATE
AIRCRAFT MAINTENANCE THEORY N2
TIME: 3 HOURS
MARKS: 100

INSTRUCTIONS AND INFORMATION

1. Answer ALL the questions.
2. Read ALL the questions carefully.
3. Number the answers according to the numbering system used in this question paper.
4. Keep subsections of questions together.
5. Sketches must be large, neat and fully labelled.
6. Write neatly and legibly.

Copyright reserved

QUESTION 1

Various options are given as possible answers to the following questions. Choose the answer and write only the letter (A–C) next to the question number (1.1–1. 5) in the ANSWER BOOK.

1.1 The fineness ratio of the wing of the aircraft can be described as the ...

A amount of times the thickness will divide into the chord.
B amount of times the chord will divide into the span.
C curvature of the upper surface of the aerofoil.

1.2 Various stresses occur on the aircraft during flight and on the ground. The wing experiences a variety of stresses like ...

A tension, compression, torsion and shear.
B tension, compression, bending and torsion.
C tension, compression, bending and shear.

1.3 When adjustments are made on the flying control system cables, a tensiometer is used to check the tension adjustment. Before the test can proceed, certain precautions must be taken of which the tensiometer check out for accuracy is one. During this check out ...

A make sure the safety pins are removed.
B check the condition of the attachment points.
C check the expiry date on the tensiometer.

1.4 Air conditioning may be defined as the simultaneous regulation of the factors affecting the atmosphere within the structure of an aircraft. This involves ...

A temperature, humidity and ventilation.
B temperature, pressure and ventilation.
C temperature, pressure and humidity.

1.5 The gyroplane and helicopter are both equipped with a main rotor. The main purpose of the rotor is to produce lift and, in the case of the helicopter, forward thrust which requires the rotor of the helicopter to ...

A tilt backwards.
B tilt forwards.
C form a cone shape.

(5 × 1) **[5]**

Copyright reserved

QUESTION 2

2.1 Make neat, labelled drawings to illustrate the difference in pressure distribution over an aerofoil at -5°, +4° and +15°. (6)

2.2 At a certain angle, the lift is at its greatest. Beyond that angle, it will rapidly decrease.

At which angle is the lift at its greatest? (1)

2.3 In FIGURE 1 below, a damaged cluster of an air frame is illustrated.

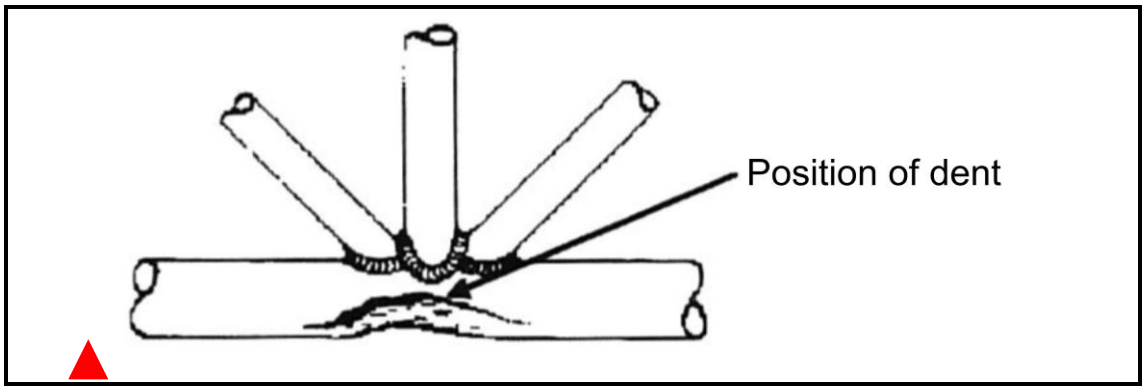

FIGURE 1

The damage can be repaired by patching.

Describe how such a repair is carried out. (7)

2.4 The semi-monocoque air frame structure consists of frames (also called formers or hoops), stringers and longerons.

What is the function of each of these parts? (6)
[20]

QUESTION 3

3.1 Two types of relief valves are normally fitted in aircraft hydraulic systems: system relief valves and thermal relief valves.

Explain the function of each of these valves. (4)

3.2 Both valves mentioned in QUESTION 3.1 are fitted with an adjustment device, usually a screw (see FIGURE 2 below).

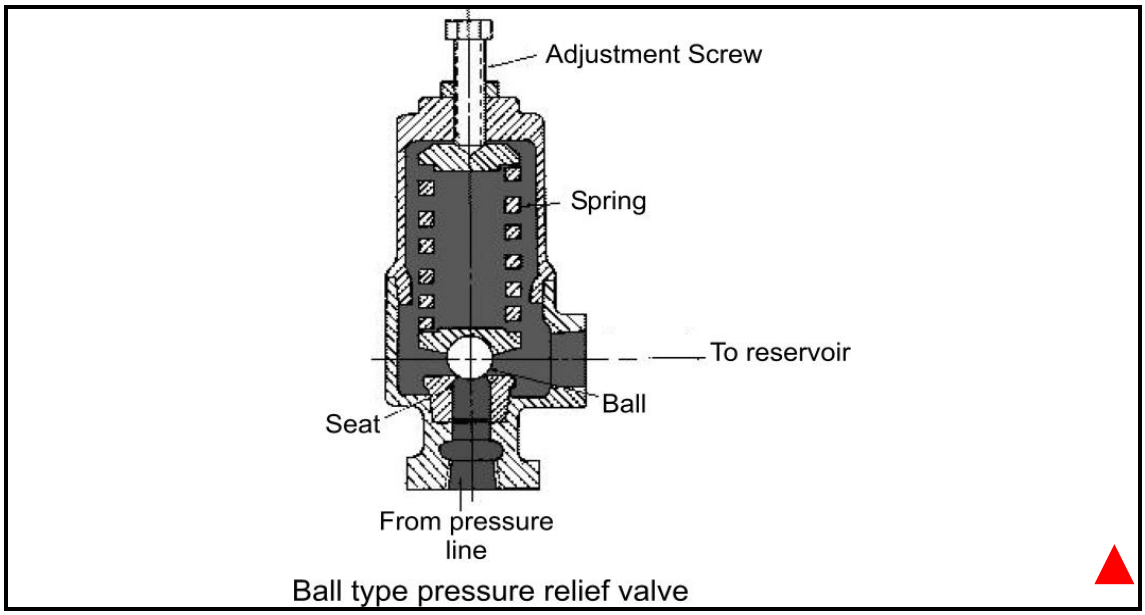

FIGURE 2

What is the purpose of this adjustment device? (2)

3.3 All aircraft pneumatic systems are equipped with a moisture separator to remove, as much as possible, water and oil out of the air in the system.

Why is this function so important? (3)

3.4 Almost all modern passenger aircraft are today equipped with a pressurisation system. This allows the aircraft to fly more economically at high altitudes and still have sufficient oxygen in the cabin at that altitude for comfortable breathing. However this also has drawbacks.

What are the drawbacks of having this system on an aircraft? (4)

3.5 Make a neat, labelled drawing of a tube type heat exchanger used on pressurisation and air conditioning systems. Indicate the air and oil flow through these devices to illustrate their functioning. (7)

3.6 Combustion heaters are used when an aircraft that is powered by a piston engine power plant requires hot air for de-icing or anti-icing.

How do these components work? (4)

[24]

Copyright reserved

QUESTION 4

4.1 Aircraft rigging checks are carried out on aircraft air frames at regular intervals.

What is the purpose of these structural rigging checks? (2)

4.2 An aircraft is flying nose-heavy.

State THREE reasons why this could happen if it is NOT due to atmospheric conditions or improper loading. (3)

4.3 What does the term *soaking* (or holding) mean with reference to heat treatment of metals? (3)

4.4 Name the TWO principal methods used for heating aluminium and aluminium alloys during a heat treatment process. (2)

4.5 Name TWO main conditions that can cause crazing in plastics. (2)

4.6 Define the concept *metal corrosion* that may affect aircraft structures. (2)

4.7 How can metal corrosion be reduced during the manufacturing of an aircraft? (4)

[18]

QUESTION 5

5.1 Detonation can be a serious problem on piston engines and can even lead to total engine failure.

What is the cause of this unwanted problem? (5)

5.2 Lubrication is one of the most important factors in ensuring a long life and reliability of an aircraft engine. Using the correct grade of oil also plays a role in engine life.

State FIVE OTHER benefits of using the correct grade of oil on an aircraft engine. (5)

5.3 Define the technical term *carburation.* (2)

5.4 Direct fuel injection systems used on aircraft piston engines have become very common on a variety of aircraft today.

What advantages does the direct fuel injection system have over the traditional carburettor systems? (4)

Copyright reserved

5.5 How are the following engine boosting systems driven:

5.5.1 Supercharger

5.5.2 Turbocharger

(2 × 2) (4)

5.6 Illustrated in FIGURE 3 below is a variable pitch propeller set to a fine pitch position.

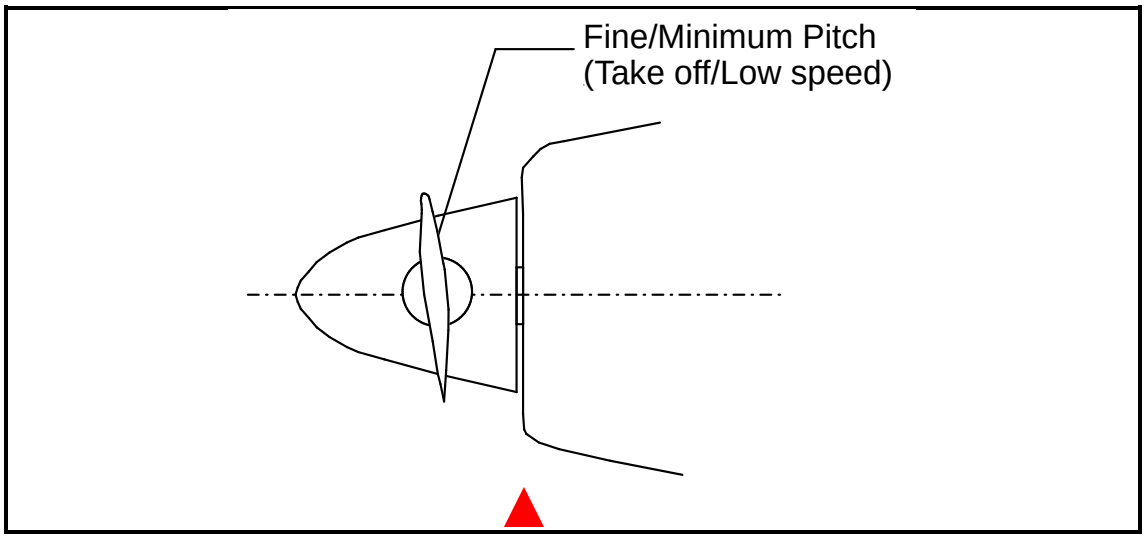

FIGURE 3

Redraw the illustration in your answer book but add the course pitch, reverse pitch and feathering positions on the same drawing.

Label the three positions you add. (3)
[23]

QUESTION 6

6.1 State TWO operating factors that affect piston engine power. (2)

6.2 During a minor/annual inspection on an aircraft the engine controls will be inspected.

State TWO items that would appear on the checklist. (2)

6.3 Define the effective angle of incidence with reference to helicopters and gyroplanes. (2)

6.4 Gas turbine engines can be fitted with either a centrifugal flow compressor or an axial flow compressor or both.

What components does an axial flow compressor consist of? (4)
[10]

TOTAL: 100

Copyright reserved