higher education & training

Department:
Higher Education and Training
REPUBLIC OF SOUTH AFRICA

T10**(E)**(A9)T

NATIONAL CERTIFICATE

AIRCRAFT MAINTENANCE THEORY N2

(11041102)

9 April 2018 (X-Paper)
09:00–12:00

This question paper consists of 8 pages.

Copyright reserved

DEPARTMENT OF HIGHER EDUCATION AND TRAINING
REPUBLIC OF SOUTH AFRICA

NATIONAL CERTIFICATE
AIRCRAFT MAINTENANCE THEORY N2
TIME: 3 HOURS
MARKS: 100

INSTRUCTIONS AND INFORMATION

1. Answer ALL the questions.
2. Read ALL the questions carefully.
3. Number the answers according to the numbering system used in this question paper.
4. Sketches must be large, neat and fully labelled.
5. Write neatly and legibly.

Copyright reserved

QUESTION 1

Various options are given as possible answers to the following questions. Choose the answer and write only the letter (A–C) next to the question number (1.1–1.4) in the ANSWER BOOK.

1.1 The FIVE factors that affect lift are ...

A wingspan, angle of attack, density of the air, thrust and wing surface area.
B aerofoil shape, angle of attack, density of the air, velocity of the air and wing surface area.
C fineness ratio, angle of incidence, humidity of the air, velocity of the air and wing surface area.

1.2 The TWO case-hardening heat treatment processes that are used for treating steel, are the … methods.

A carburising and nitriding/cyaniding
B cementation and phosphating
C alodising and coslettising

1.3 The Saybolt viscometer is used to measure the viscosity of an oil. During the test 60 cubic centimetres of oil is passed through the meter at a standard temperature of ...

A 15 °C.
B 37 °C.
C 100 °C.

1.4 The effective pitch of a propeller is the ...

A actual distance that the aeroplane moves forward during one revolution (360°) of the propeller in flight.
B angle between the face of the blade section and the direction of the relative airstream.
C angle between the blade section and the plane in which the propeller blades move.

(4 × 1) **[4]**

QUESTION 2

2.1 Briefly explain what happens to the lift of an aerofoil when the angle of attack changes. (3)

2.2 Induced drag develops due to cross flow of high and low pressure airflows above and below the wings of an aircraft.

Name TWO devices that can be used to combat this type of drag. (2)

2.3 During structural repairs, marking off is required when damaged or deteriorated materials have to be removed.

Name TWO tools that can be used for marking off during this process. (2)

2.4 Refer to FIGURE 1 and answer the questions.

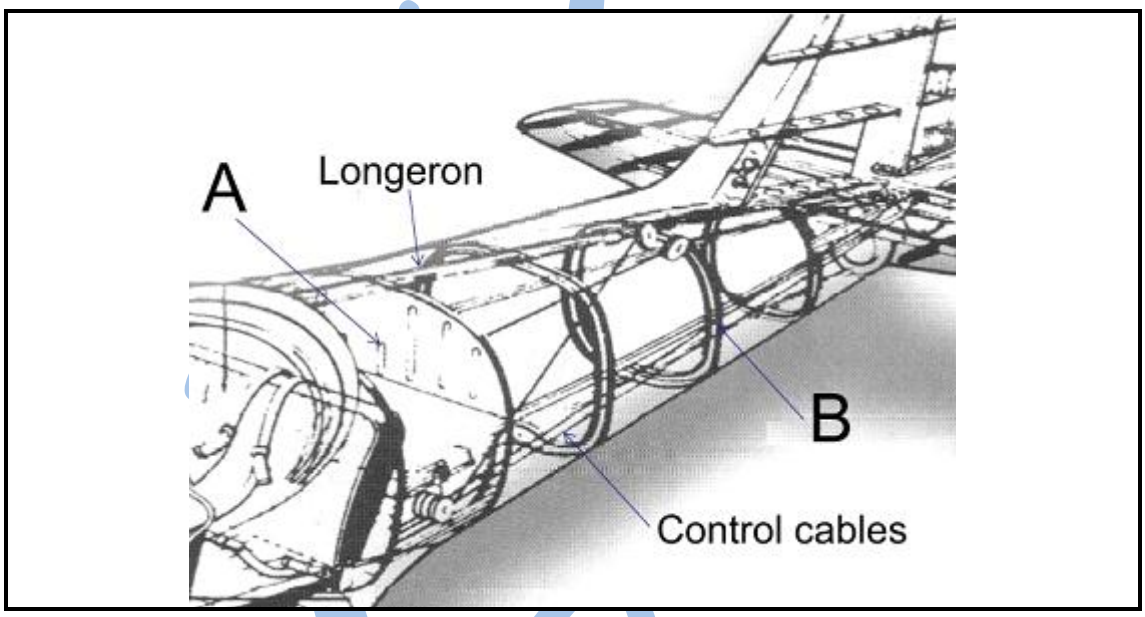

FIGURE 1

2.4.1 Name the different parts indicated in FIGURE 1 by writing only the answer next to the letter (A–B) in the ANSWER BOOK. (2)

2.4.2 Name the type of fuselage construction illustrated in FIGURE 1. (1)

2.5 After assembling an aircraft, the structure has to be checked for correct alignment.

Describe how the engine alignment check is carried out. (5)

2.6 Explain the heat treatment process of annealing as applied to aluminium and aluminium alloys. (3)

Copyright reserved

2.7 Aircraft structures that are mostly made of metal always have the possibility of deterioration due to corrosion. As a result a technician has to identify corrosion.

Explain how surface corrosion on steel, aluminium and copper is identified. (3)

2.8 What methods could be used to detect intergranular corrosion? (2)

2.9 If intergranular corrosion is detected in a metal component, what treatment can be applied? (1)

[24]

QUESTION 3

3.1 Name the different parts indicated in FIGURE 2 by writing only the answer next to the letter (A–D) in the ANSWER BOOK.

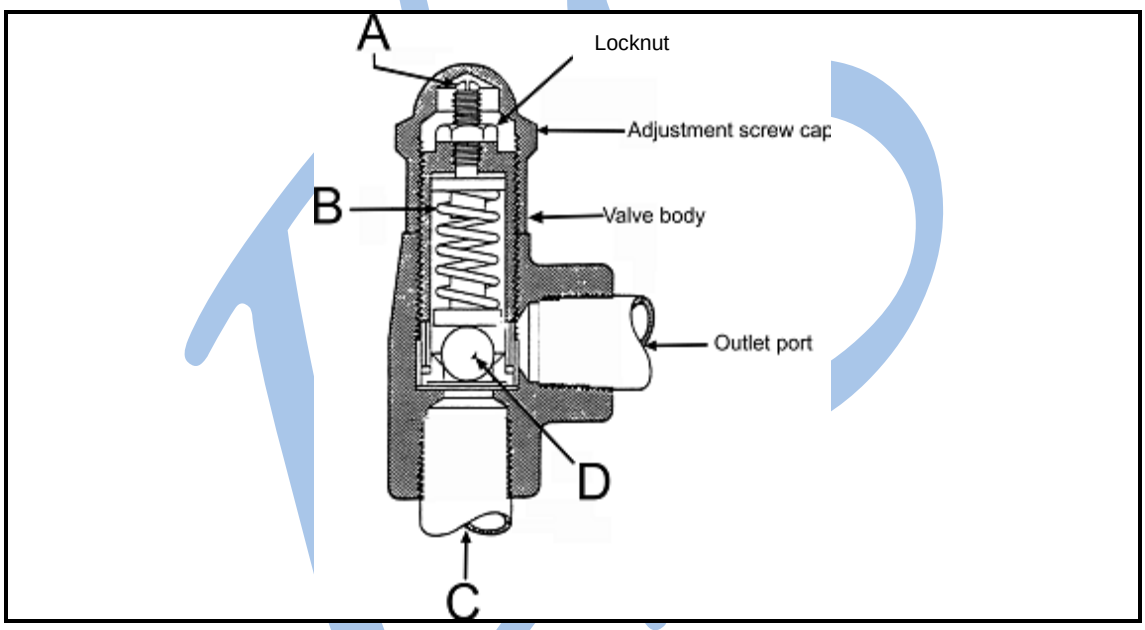

FIGURE 2 (4)

3.2 State why certain hydraulic pumps in aircraft are provided with a shear section on the drive shaft and describe how this works. (2)

3.3 Explain THREE differences found when comparing *hydraulic systems* and *pneumatic systems*. (3)

3.4 Pneumatic systems are dependent on pressurised air to operate. Leakage in the system can be detrimental to the operation of the system.

Describe how a simple leak test can be done to find air leaks. (2)

Copyright reserved

3.5 There is a major difference between aircraft equipped with a pressurisation system and those that are not. Each has its own advantages and disadvantages.

Discuss FOUR disadvantages of equipping an aircraft with a pressurisation system. (4)

3.6 Discuss the function of the negative pressure-relief valve required on an aircraft equipped with a pressurisation system. (2)

3.7 Thermal de-icing and anti-icing systems use heat produced by either an electrical or hot-air system to function.

Explain what methods can be used in hot-air systems to provide heated air. (3)
[20]

QUESTION 4

4.1 Name the THREE zones in which the airflow through the combustion chamber is divided and state the type of air flowing through each zone. (3)

4.2 FIGURE 3 shows a gas turbine engine.

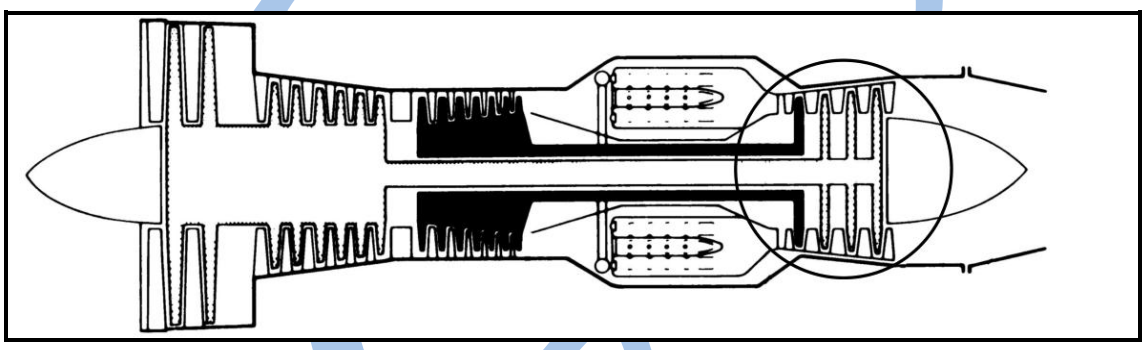

FIGURE 3

4.2.1 Name the section that is circled. (1)

4.2.2 Name the components that this section consists of. (2)

4.2.3 Explain the function of this section. (2)

4.3 The gas turbine engine functions on the Brayton cycle.

Name the FOUR events that take place during this cycle. (4)

4.4 Gas turbine fuels are required for operation at very high altitudes and low temperatures.

State TWO requirements for gas turbine fuels. (2)

Copyright reserved

4.5 Detonation is a very serious condition affecting aircraft piston engines running on Avgas. If this condition is not prevented it can cause serious damage to an engine.

Explain TWO results of detonation on an engine. (2)

4.6 Each carburettor has six systems to provide for engine operation under various loads and at different engine speeds.

Name FOUR of these systems. (4)

4.7 Describe the difference between an *engine-driven supercharger* and a *turbocharger*. (2)

4.8 Supercharging is done to increase the air pressure entering the engine induction system, to keep the fuel/air ratio correct at high altitudes as well as maintain the power output at higher altitudes. However, it brings about four main secondary effects.

Name TWO of these secondary effects. (2)
[24]

QUESTION 5

5.1 Explain how the two-pitch variable pitch propeller operates. (3)

5.2 Answer the following questions with regard to mechanical efficiency:

5.2.1 How is mechanical efficiency determined?

5.2.2 Is it possible for the mechanical efficiency to be 100%? Explain your answer.

(2 × 2) (4)

5.3 Describe the starting procedure of a piston engine during a ground-run test of the engine. (8)

5.4 Explain the inspection of the following during a minor inspection of the landing gear:

5.4.1 Wheels

5.4.2 Tyres

(2 × 1) (2)

Copyright reserved

5.5 Briefly describe the effects of the following factors on the performance of a gas turbine engine:

5.5.1 Humidity

5.5.2 Density

(2 × 2) (4)
[21]

QUESTION 6

6.1 Discuss the differences between the *gyroplane* and the *helicopter* with regard to each one's appearance. (4)

6.2 Explain the construction of the main rotor blades. (1)

6.3 Define the term *gyroscopic precision.* (2)
[7]

TOTAL: 100

Copyright reserved