higher education & training

Department:
Higher Education and Training
REPUBLIC OF SOUTH AFRICA

NATIONAL CERTIFICATE

AIRCRAFT MAINTENANCE THEORY N1

(11041091)

12 August 2021 (X-paper)
09:00–12:00

This question paper consists of 7 pages.

280Q1G2112

Copyright reserved

DEPARTMENT OF HIGHER EDUCATION AND TRAINING
REPUBLIC OF SOUTH AFRICA

NATIONAL CERTIFICATE
AIRCRAFT MAINTENANCE THEORY N1
TIME: 3 HOURS
MARKS: 100

INSTRUCTIONS AND INFORMATION

1. Answer all the questions.
2. Read all the questions carefully.
3. Number the answers according to the numbering system used in this question paper.
4. Only use a black or a blue pen.
5.. Write neatly and legibly.

Copyright reserved

QUESTION 1

Various options are given as possible answers to the following questions. Choose the answer and write only the letter (A–C) next to the question number (1.1–1.10) in the ANSWER BOOK.

1.1 Information found in an aircraft logbook:

A History of maintenance and operation of aircraft
B Complete step-by-step instructions to operate and fly aircraft
C Pilot's portfolio of training on that specific aircraft

1.2 Handling ball and roller bearings:

A Inspect bearings for corrosion and spin with dry air.
B Use bearing gloves when handling bearings.
C Pack bearings with any type of grease.

1.3 A hydraulic system is normally serviced with a synthetic-base fluid but the apprentice serviced it with a mineral-base fluid:

A Keep quiet in case of getting into trouble.
B Drain system and recondition all contaminated units.
C Drain and flush system with synthetic-base fluid.

1.4 Fretting corrosion is a particularly damaging attack of corrosion caused by …

A two mating surfaces, normally at rest with respect to one another, experiencing slight relative motion.
B the combined effect of sustained tensile stresses and a corrosive environment.
C strong acids and alkalis on the surface.

1.5 Viscosity means …

A the degree of resistance of a fluid to flow.
B weight per unit volume.
C the force acting upon a unit area.

1.6 Hardening is the process applied to …

A all aluminium alloys.
B all steels.
C magnesium alloys.

Copyright reserved

1.7 A true monocoque fuselage construction derives its principal strength from …

A vertical webs.
B skin.
C longerons.

1.8 When a force is applied to a spinning gyro of a helicopter the reaction occurs … later.

A 90°
B 50°
C 60°

1.9 During the inlet stroke on a reciprocating engine the piston moves …

A down.
B up.
C at TDC.

1.10 The primary function of the accessories section of a gas turbine engine is to provide space for the mounting of accessories components like the …

A fuel pump.
B reduction gears.
C oil sump.

(10 × 1) **[10]**

QUESTION 2

Indicate whether the following statements are TRUE or FALSE by writing only 'True' or 'False' next to the question number (2.1–2.5) in the ANSWER BOOK.

2.1 Integral fuel tanks must be removed to be repaired.

2.2 Before-flight inspection is done at least 8 hours before a flight.

2.3 Elevators are movable control surfaces fitted to the leading edge of the horizontal stabilisers.

2.4 The treatment for dissimilar metal corrosion is to replace the part.

2.5 Torsion is the stress where the forces applied cause a twisting action on the material.

(5 × 1) **[5]**

Copyright reserved

QUESTION 3

3.1 Identify the indicated parts in FIGURE 1 by choosing a term from the list below. Write only the term next to the letter (A–D) in the ANSWER BOOK.

drive gear; inlet port; driven gear; outlet port; driven shaft

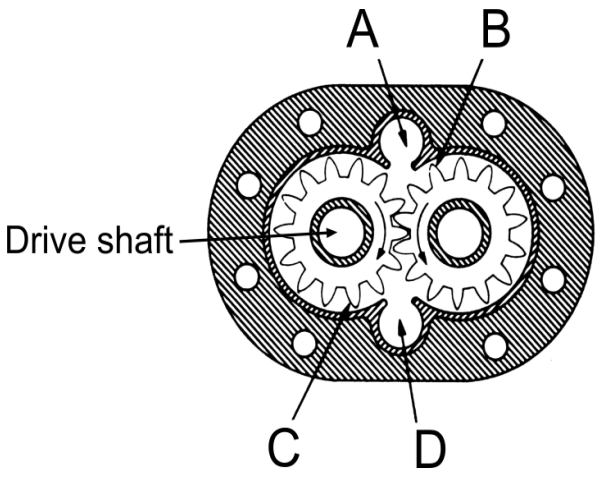

FIGURE 1 (4)

3.2 Name the component in FIGURE 1 used in a hydraulic system. (1)

3.3 Make a neat, labelled sketch to illustrate the centre of pressure of an aerofoil at the normal 4° angle of attack during flight. Also indicate the centre of pressure distribution over the aerofoil at that angle. (5)
[10]

QUESTION 4

4.1 State THREE requirements for the general use of aluminium during aircraft fuselage and engine manufacturing. (3)

4.2 Deterioration due to corrosion is always a possibility in aircraft structures that are mostly made of metal.

Explain how a technician can identify surface corrosion on steel, aluminium and copper. (3)

4.3 How can intergranular corrosion be detected? (2)

4.4 What treatment can be applied to intergranular corrosion? (1)

4.5 Name the strokes of a reciprocating piston engine consisting of a four-stroke cycle. (4)

4.6 Answer the questions on the direct fuel-injection system in FIGURE 2.

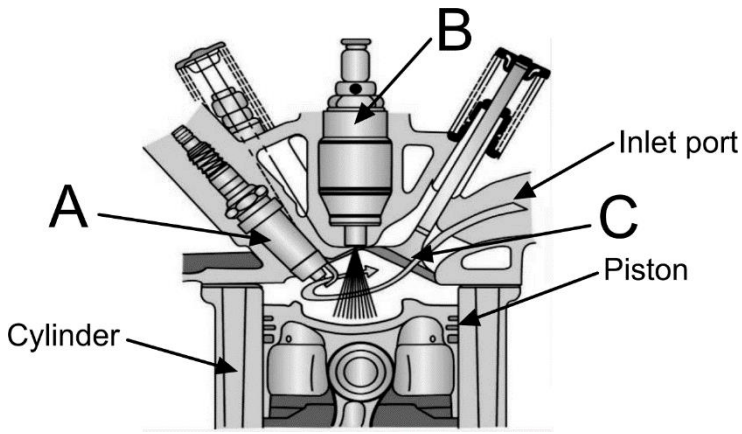

FIGURE 2

4.6.1 Label the indicated parts by writing the answer next to the letter (A–C) in the ANSWER BOOK. (3)

4.6.2 What is the purpose of part B? (2)

4.7 Explain the purpose of an engine-driven supercharger. (2)
[20]

QUESTION 5

5.1 Make a neat, labelled drawing of a turbofan gas-turbine engine. (12)

5.2 Discuss the FOUR steps in the Brayton cycle on which the gas-turbine engine functions. (8)
[20]

QUESTION 6

Discuss the differences between a gyroplane and a helicopter regarding each of the following:

6.1 Appearance

6.2 Take-off and landing

6.3 Construction

6.4 Performance

6.5 Rotor attitude

(5 × 2) **[10]**

QUESTION 7

7.1	Name SIX essential subsystems of a float-type carburettor for engine operation under various loads and at different engine speeds.	(6)
7.2	Identify FOUR types of propellers.	(4)
		[10]

QUESTION 8

8.1	Give FOUR reasons why inspections should be done on aircraft.	(4)
8.2	Give FOUR reasons why duplicate inspections are done on aircraft.	(4)
8.3	Name FOUR forces acting on an aircraft during a flight.	(4)
8.4	Name THREE types of drag acting on an aircraft.	(3)
		[15]

TOTAL: 100

Copyright reserved