higher education & training

Department:
Higher Education and Training
REPUBLIC OF SOUTH AFRICA

NATIONAL CERTIFICATE

MAINTENANCE MANAGEMENT: FARMING N5

(4090535)

3 June 2021 (X-paper)
09:00–12:00

Calculators may be used.

This question paper consists of 9 pages.

193Q1J2103

Copyright reserved

DEPARTMENT OF HIGHER EDUCATION AND TRAINING
REPUBLIC OF SOUTH AFRICA

NATIONAL CERTIFICATE
MAINTENANCE MANAGEMENT: FARMING N5
TIME: 3 HOURS
MARKS: 100

INSTRUCTIONS AND INFORMATION

1. Answer all the questions.
2. Read all the questions carefully.
3. Number the answers according to the numbering system used in this question paper.
4. Sketches should be large and neat and may be made in pencil.
5. Use only a black or blue pen.
6. Write neatly and legibly.

Copyright reserved

QUESTION 1

1.1 Various options are given as possible answers to the following questions. Choose the answer and write only the letter (A–D) next to the question number (1.1.1–1.1.10) in the ANSWER BOOK.

1.1.1 The … control(s) the flow of fuel in the fuel bowl …

A throttle valve (butterfly)
B venturi
C needle valve and seat
D main jet

1.1.2 The … is/are made of plastic or brass and control(s) the fuel level.

A needle valve and seat
B throttle valve (butterfly)
C venturi
D float

1.1.3 The … is used to check the idle mixture.

A exhaust gas analyser
B micrometer
C idle mixture spanner
D idle sensor

1.1.4 The reason for brake pedal free play is to …

A prevent binding brakes and overheating.
B increase the brake fluid pressure.
C automatically adjust the handbrake.
D prevent the loss of brake fluid.

1.1.5 When referring to a drum brake with an anchor block, the term self-energising means …

A the trailing shoe is forced into the drum brake.
B the leading shoe is forced into the drum brake.
C neither the trailing nor the leading brake shoe is forced into the drum brake.
D the drum brake is energised by the hydraulic fluid.

1.1.6 A … is NOT a cause for water entering the oil.

A blown cylinder head gasket
B broken piston ring
C leaking water pump
D cracked cylinder head

Copyright reserved

1.1.7 … is/are NOT a cause for excessive oil consumption.

A A valve cover gasket
B A clogged oil filter
C A crankshaft oil seal
D Worn piston rings

1.1.8 The function of a tyre is to …

A provide a firm base on which to fit the brakes.
B withstand the forces caused by accelerating and breaking.
C maintain acceptable tyre wear.
D act as a cushion between the road, vehicle and passengers.

1.1.9 The function of the wheel rim is to …

A provide a firm base on which to fit the tyre.
B maintain acceptable tyre wear.
C act as a cushion between the road, vehicle and passengers.
D ensure a smooth ride.

1.1.10 The function of the suspension system is to …

A provide a firm base on which to fit the tyre.
B withstand the forces caused by accelerating and breaking.
C maintain acceptable tyre wear.
D act as a cushion between the road, vehicle and passengers.

(10 × 1) (10)

1.2 Choose a description from COLUMN B that matches an item in COLUMN A. Write only the letter (A–F) next to the question number (1.2.1–1.2.5) in the ANSWER BOOK.

COLUMN A		COLUMN B	
1.2.1	Density test	A	contains sulphuric acid and distilled water
1.2.2	Capacity test	B	hydrometer testing battery electrolyte
1.2.3	Three-minute-charge test	C	charging a flat battery
1.2.4	Jumping a battery	D	testing the battery delivery under a load
1.2.5	Battery construction	E	broken battery terminals
		F	use a supercharger on 40 amperes

(5 × 1) (5)

1.3 Choose a part from the injector in COLUMN B that matches a term in COLUMN A. Write only the letter (A–G) next to the question number (1.3.1–1.3.6) in the ANSWER BOOK.

COLUMN A		COLUMN B
1.3.1	Spring	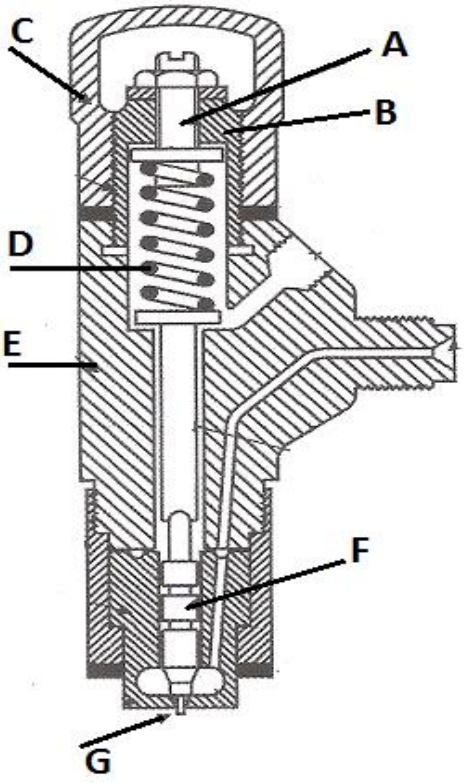
1.3.2	Body	
1.3.3	Spring cap nut	
1.3.4	Spring adjusting screw	
1.3.5	Screw cap	
1.3.6	Spray hole	

(6 × 1) (6)

1.4 Choose a description from COLUMN B that matches a term in COLUMN A. Write only the letter (A–E) next to the question number (1.4.1–1.4.4) in the ANSWER BOOK.

COLUMN A		COLUMN B	
1.4.1	Opening pressure	A	test for wear between the needle and its holder
1.4.2	Back leakage	B	correct atomisation of the fuel
1.4.3	Spray pattern	C	contains a plunger which is rotated and moved back and forth
1.4.4	Dry-seat test	D	test for holes blocked with carbon or dirt
		E	test for blobs or fuel dribble after spraying

(4 × 1) (4)

[25]

QUESTION 2

2.1 Choose a pattern of the tyre tread shown in COLUMN B that matches a fault in COLUMN A. Write only the letter (A–E) next to the question number (2.1.1–2.1.5) in the ANSWER BOOK.

COLUMN A		COLUMN B	
2.1.1	Faulty shock absorber	A	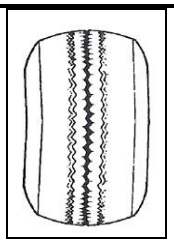
2.1.2	Incorrect in- or out-tracking		
2.1.3	Incorrect camber	B	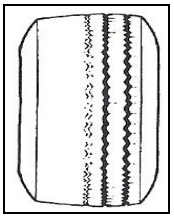
2.1.4	Overinflated		
2.1.5	Underinflated	C	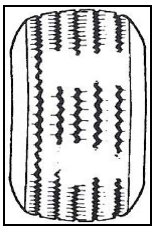
		D	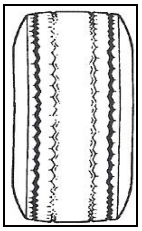
		E	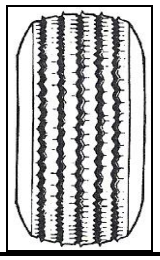

(5 × 1) (5)

2.2 Complete the following paragraph by choosing a word from the list below. Write only the answer next to the question number (2.2.1–2.2.5) in the ANSWER BOOK.

standards; hygroscopic; not; boiling; absorb; freeze; hydraulic; dissolve; fluid

Many brake fluids are (2.2.1) … which means they can (2.2.2) … water from the atmosphere. This lowers the (2.2.3) … point. Do (2.2.4) … leave the top off brake fluid containers. DOT (2.2.5) … refer to the boiling point, i.e. DOT 4 and DOT 5. (5 × 1) (5)

2.3 Make a sketch of a drum brake system and show the following on the sketch:

2.3.1 Drum (1)
2.3.2 Leading shoe (2)
2.3.3 Single-piston wheel cylinders (2)
2.3.4 Turning direction of the wheel (1)

2.4 Choose a picture from COLUMN B that matches a term in COLUMN A. Write only the letter (A–E) next to the question number (2.4.1–2.4.4) in the ANSWER BOOK.

COLUMN A		COLUMN B
2.4.1	Rack and pinion	A 
2.4.2	Worm wheel	B 
2.4.3	Spur gear	C 
2.4.4	Helical gear	D 
		E 

(4 × 1) (4)

2.5 Discuss the picture below by referring to the type of rim and safety.

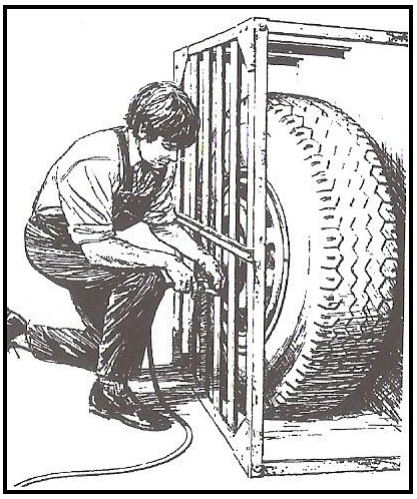

(2)

2.6 Indicate whether the following statements are TRUE or FALSE by writing only 'True' or 'False' next to the question number (2.6.1–2.6.3) in the ANSWER BOOK.

2.6.1 Never use compressed air to remove brake dust from the brake assembly.

2.6.2 Brake fluid damages automotive paint and other finishes.

2.6.3 The wheel cylinder changes hydraulic pressure into mechanical force.

(3 × 1) (3)
[25]

QUESTION 3

3.1 Explain the safe handling and storing of oxygen and acetylene gas cylinders to conform to health and safety regulations.

3.2 Make a neat sketch of the LEFTWARD welding method. Show the angles of the filler rod and welding flame, the workpiece and welding direction.

3.3 Explain the safe shut-down procedure of an oxyacetylene welding process.

(3 × 5) **[15]**

QUESTION 4

4.1 Calculate the total resistance of TWO resistors in series with readings of 4 and 6 ohms respectively. (2)

4.2 Convert a 10 horsepower motor to kilowatt. (3)

4.3 Five bulbs of 300 watt each are switched on at 18:00 and switched off at 06:00 daily.
The cost of one unit is R1,50.
The bulbs were used in a 30 days' month.
Calculate the cost of electricity used by the bulbs during this month. (5)
[10]

QUESTION 5

5.1 Name the different components of the water closet by choosing an option for each one from the following list. Write only the answer next to the letter (A–G) in the ANSWER BOOK.

sewer pipe; water seal; lavatory pan (toilet); vent pipe; cistern, inspection chamber or drain; septic tank; access eye or inspection eye; drinking water pipe

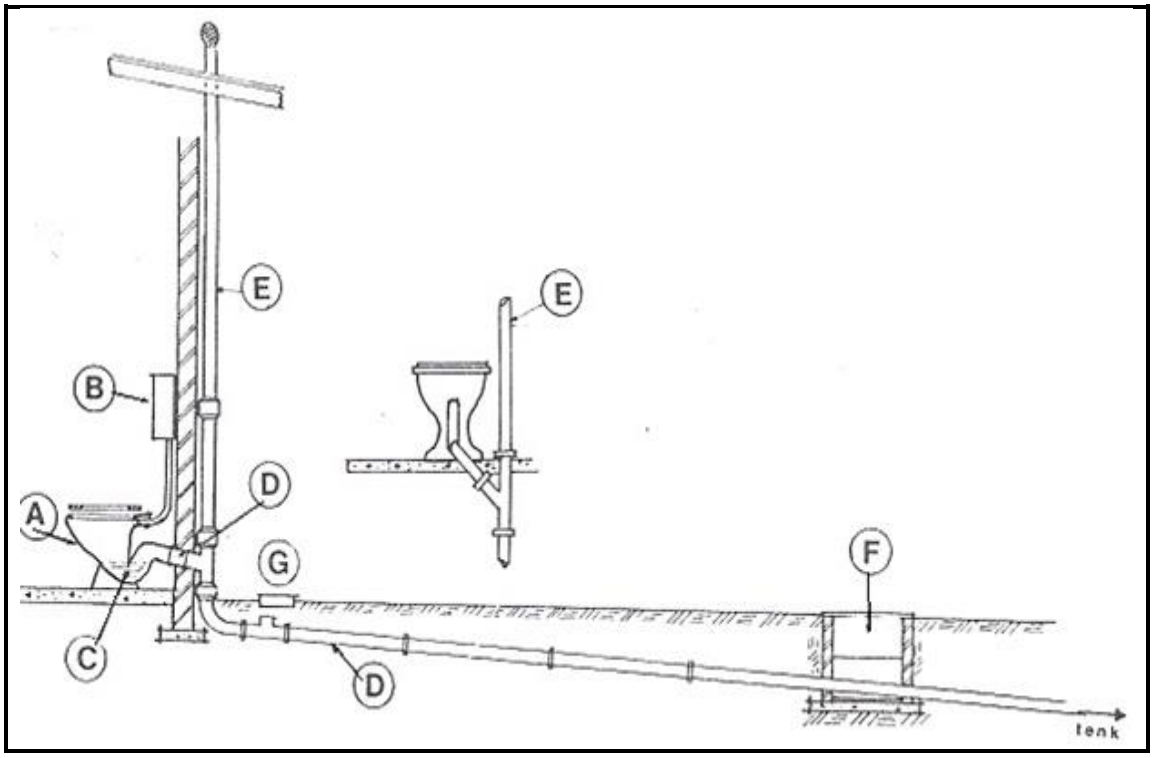

(7)

5.2 Name the function of 'C' in QUESTION 5.1. (2)

5.3 Name the function of 'E' in QUESTION 5.1. (2)

5.4 Explain at which points you need to install item 'F' in QUESTION 5.1. (2)

5.5 Explain ONE guideline when installing 'D' in QUESTION 5.1. (2)

5.6 Explain in TEN steps in the correct order, how to erect the roof trusses of a gable roof. (10)
[25]

TOTAL: 100

Copyright reserved