higher education & training

Department:
Higher Education and Training
REPUBLIC OF SOUTH AFRICA

NATIONAL CERTIFICATE

MAINTENANCE MANAGEMENT: FARMING N5

(4090535)

13 October 2020 (X-paper)
09:00–12:00

This question paper consists of 10 pages.

239Q1B2013

Copyright reserved

DEPARTMENT OF HIGHER EDUCATION AND TRAINING
REPUBLIC OF SOUTH AFRICA

NATIONAL CERTIFICATE
MAINTENANCE MANAGEMENT: FARMING N5
TIME: 3 HOURS
MARKS: 100

INSTRUCTIONS AND INFORMATION

1. Answer all the questions.
2. Read all the questions carefully.
3. Number the answers according to the numbering system used in this question paper.
4. Write neatly and legibly.

Copyright reserved

QUESTION 1

1.1 Various options are given as possible answers to the following questions. Choose the answer and write only the letter (A–D) next to the question number (1.1.1–1.1.10) in the ANSWER BOOK.

1.1.1 Which ONE is not a function of the carburettor?

A Atomises the petrol into droplets
B Mixes diesel and air
C Controls airflow to the engine
D Controls vacuum-operated devices

1.1.2 Controls airflow through carburettor:

A Float
B Throttle valve (butterfly)
C Needle valve and seat
D Venturi

1.1.3 Creates a vacuum inside carburettor:

A Needle valve and seat
B Float
C Venturi
D Throttle valve (butterfly)

1.1.4 How many pistons does the floating (sliding) calliper-type normally have?

A 4
B 3
C 1
D 2

1.1.5 … after the brake pads have been replaced.

A Add brake fluid to the system
B The brake pedal must be pumped a few times
C Adjust the free play of the brake pedal
D Adjust the handbrake cable for free play

1.1.6 Double-leading shoe brakes are usually operated by …

A one single-piston wheel cylinder.
B one double-piston wheel cylinder.
C two double-piston wheel cylinders.
D two single-piston wheel cylinders.

Copyright reserved

1.1.7 Which ONE is not a function of lubricating oil?

A Forms a film between moving parts
B Carries away heat
C Seals space around pistons and piston rings
D Needs to be changed from time to time

1.1.8 Both inlet and outlet valves are closed and piston moves upwards:

A Intake stroke
B Compression stroke
C Combustion stroke
D Exhaust stroke

1.1.9 Intake valve is open, outlet valve is closed and piston moves downwards:

A Intake stroke
B Compression stroke
C Combustion stroke
D Exhaust stroke

1.1.10 Inlet and outlet valves are closed, piston moves downwards:

A Intake stroke
B Compression stroke
C Combustion stroke
D Exhaust stroke

(10 × 1) (10)

1.2 Indicate whether the following statements are TRUE or FALSE by writing only 'True' or 'False' next to the question number (1.2.1–1.2.5) in the ANSWER BOOK.

1.2.1 The density of the electrolyte in the battery is measured with a hydrometer.

1.2.2 A charged battery should not drop lower than 10,5 volts.

1.2.3 You can refill the battery with clean tap water.

1.2.4 There is no relationship between the fan belt adjustment and battery charging.

1.2.5 Hydrogen gas is released from the cells during charging.

(5 × 1) (5)

1.3 1.3.1 Identify the indicated components of the part in FIGURE 1 by writing only the answer next to the letter (A–D) in the ANSWER BOOK.

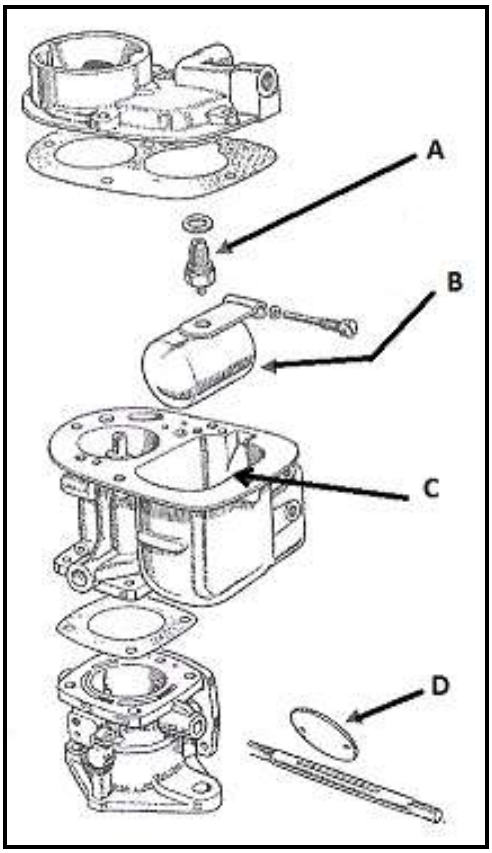

FIGURE 1 (4)

1.3.2 Name the part shown in FIGURE 1. (1)

1.4 Name FIVE safety rules which must be applied by someone who is charging a vehicle battery. (5)

[25]

QUESTION 2

2.1 Identify the component from the final drive and differential assembly in FIGURE 2 that matches a term below. Write only the letter (A–K) next to the question number (2.1.1–2.1.11) in the ANSWER BOOK.

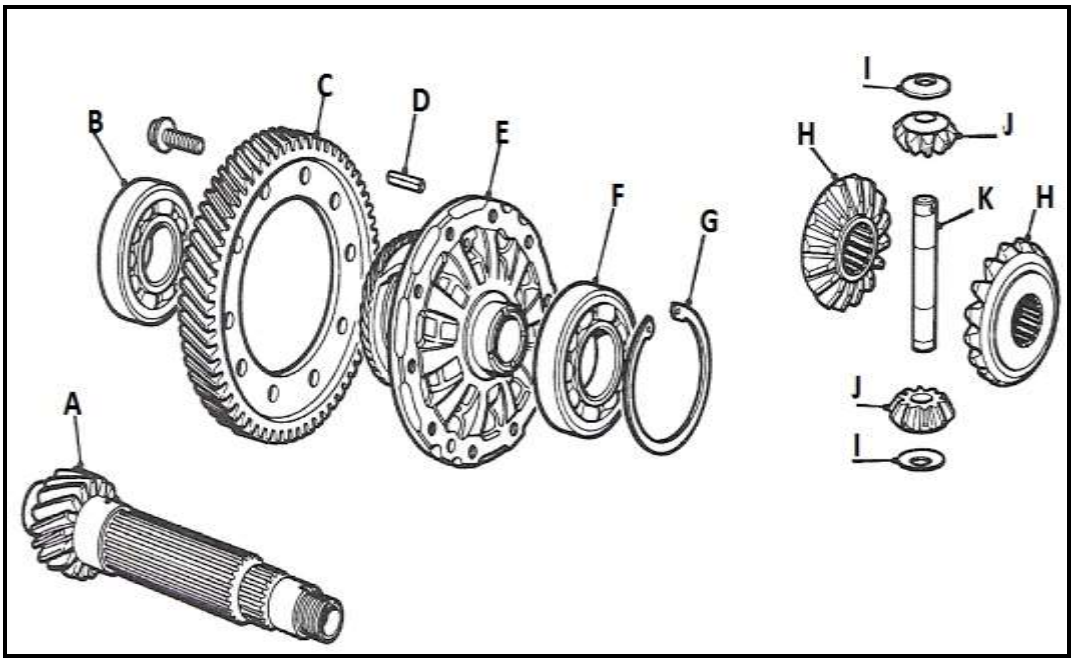

FIGURE 2

2.1.1 Bearing

2.1.2 Pin

2.1.3 Bearing

2.1.4 Sun gear pinion

2.1.5 Final drive pinion

2.1.6 Final drive gear

2.1.7 Differential casing

2.1.8 Circlip

2.1.9 Thrust washer

2.1.10 Planet gear pinion shaft

2.1.11 Planet gear pinion

(11 × 1) (11)

Copyright reserved

2.2 Complete the procedure for checking and topping up gearbox oil by choosing a word from the list below. Write only the word next to the question number (2.2.1–2.2.6) in the ANSWER BOOK.

recommended; clean; strip; level; under; plug; bottom; over; top

2.2.1 Raise vehicle off the ground to enable access to the level/filler … (1)

2.2.2 Ensure the vehicle remains … (1)

2.2.3 … the area around the level/filler plug and remove the plug. (1)

2.2.4 Oil should be level with … of threaded hole. (1)

2.2.5 Top-up using only the … oil. (1)

2.2.6 Replace the level/filler plug but do not … tighten as this could … the threads. (2)

2.3 Name THREE gearbox maintenance rules. (3)

2.4 Name FOUR maintenance rules for a suspension system. (4)

[25]

QUESTION 3

3.1 Choose a picture or term from COLUMN B that matches a term in COLUMN A. Write only the letter (A–G) next to the question number (3.1.1–3.1.7) in the ANSWER BOOK.

COLUMN A		COLUMN B	
3.1.1	Oxidising flame	A	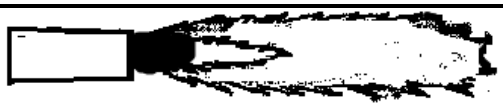
3.1.2	Neutral flame		
3.1.3	Carbonising flame	B	oxygen cylinder
3.1.4	Black colour	C	thin plate
3.1.5	Maroon/Red colour	D	
3.1.8	Rightward welding		
3.1.7	Leftward welding	E	thicker plate
		F	acetylene cylinder
		G	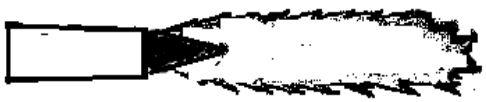

(7 × 1) (7)

3.2 Name FIVE personal protective equipment items to be worn by a person doing oxy-acetylene welding or cutting. (5)

3.3 List THREE types of joints used in welding. (3)
[15]

QUESTION 4

Study FIGURE 3 and answer the questions.

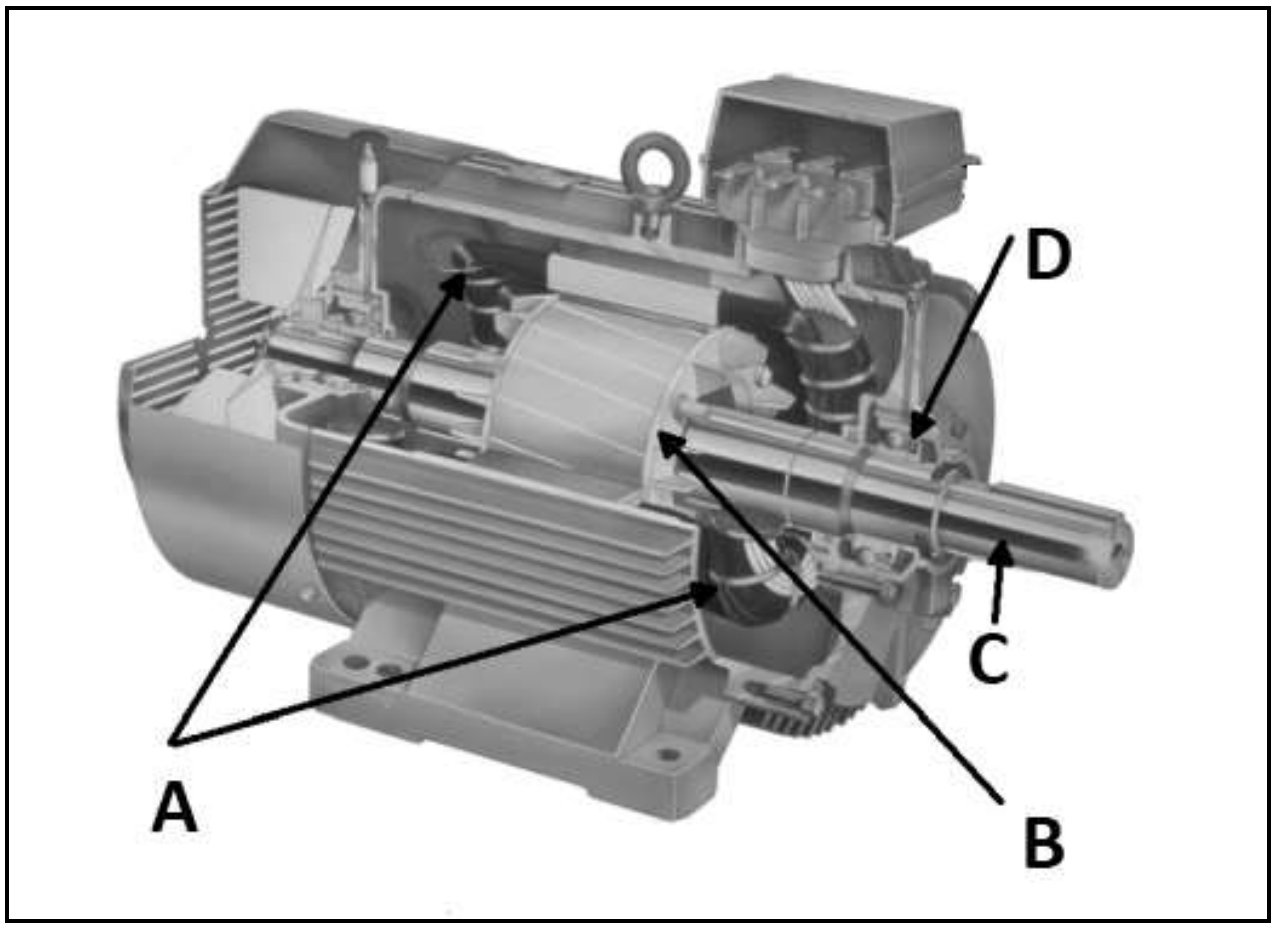

FIGURE 3

4.1 Identify the components indicated on the electrical motor by writing only the answer next to the letter (A–D) in the ANSWER BOOK. (4)

4.2 Is the electrical motor an AC induction motor or a DC motor? (1)

4.3 List FIVE information items usually written on the name plate of an electrical motor. (5)
[10]

QUESTION 5

5.1 Identify the components indicated on the type of roof construction shown in FIGURE 4 by using the terms in the list below. Write only the term next to the letter (A–H) in the ANSWER BOOK.

struts; wall plate; cleat; purlins; ridging; roof covering; rafter; tie beam; solid bar

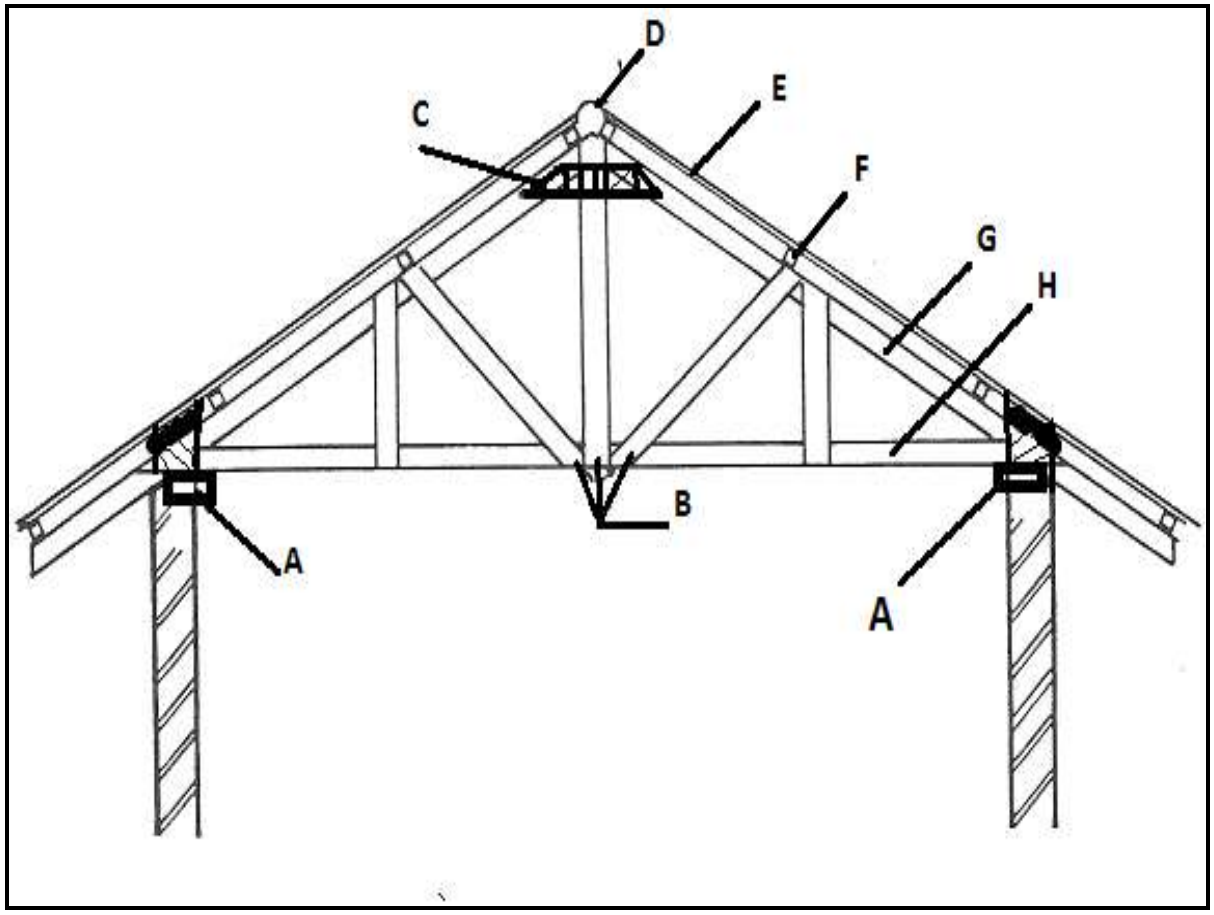

(8)

FIGURE 4

5.2 Name the type of eaves in FIGURE 4. (1)

5.3 Items A, C, G and H all have the same cross-sectional area.

Give the length and breadth of this area in millimetres. (2)

5.4 Give the length and breadth in millimetres of component F in FIGURE 4. (2)

5.5 Name TWO types of pitched roofs used in the construction of houses. (2)

5.6 Explain TWO functions of component A in FIGURE 4. (4)

Copyright reserved

5.7 Study FIGURE 5 and answer the questions.

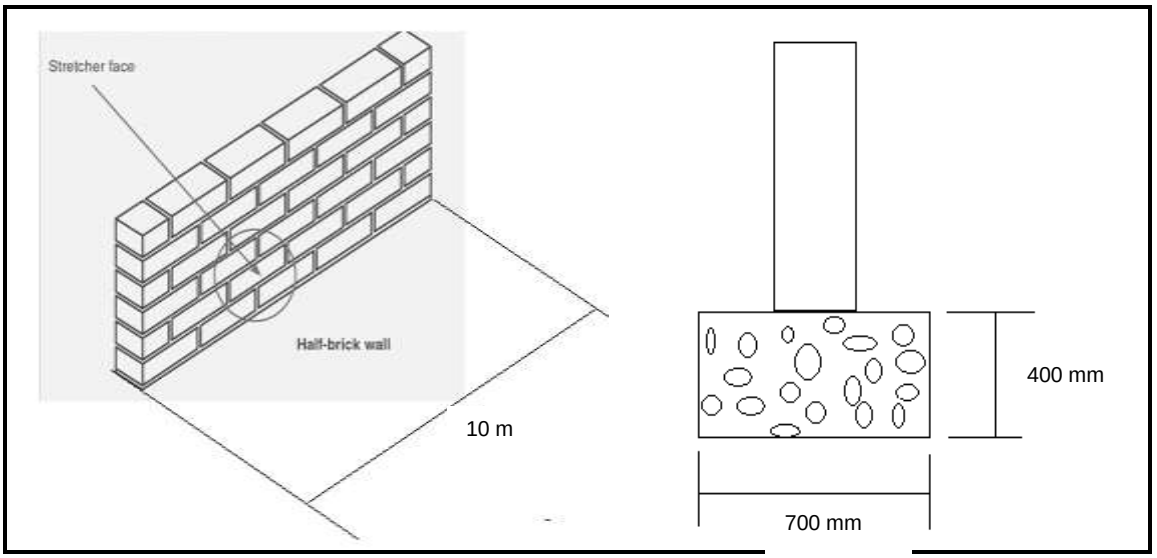

FIGURE 5

Calculate each of the following:

5.7.1 Total volume in m³ of the wall foundation

5.7.2 Total number of bags of cement for the foundation given that 5,5 bags of cement are needed per m³ concrete

5.7.3 Total cost of cement needed for the foundation if one bag of cement costs R120. (3 × 2) (6)

[25]

TOTAL: 100

Copyright reserved