higher education & training

Department:
Higher Education and Training
REPUBLIC OF SOUTH AFRICA

NATIONAL CERTIFICATE

MAINTENANCE MANAGEMENT: FARMING N5

(4090535)

25 November 2019 (X-Paper)
09:00–12:00

Nonprogrammable calculators may be used.

This question paper consists of 9 pages.

Copyright reserved

DEPARTMENT OF HIGHER EDUCATION AND TRAINING
REPUBLIC OF SOUTH AFRICA

NATIONAL CERTIFICATE
MAINTENANCE MANAGEMENT: FARMING N5
TIME: 3 HOURS
MARKS: 100

INSTRUCTIONS AND INFORMATION

1. Answer ALL the questions.
2. Read ALL the questions carefully.
3. Number the answers according to the numbering system used in this question paper.
4. Sketches and diagrams should be neatly done in pencil.
5. Write neatly and legibly.

Copyright reserved

QUESTION 1

1.1 Indicate whether the following statements are TRUE or FALSE. Choose the answer and write only 'True' or 'False' next to the question number (1.1.1–1.1.10) in the ANSWER BOOK.

1.1.1 The colour of the positive battery terminal is black.

1.1.2 The colour of the negative battery terminal is red.

1.1.3 Highly flammable gas, called hydrogen, is a by-product of charging the battery.

1.1.4 Engine overheating is not a symptom of faulty diesel injectors.

1.1.5 Poor fuel consumption is a symptom of faulty diesel injectors.

1.1.6 Do the four-nozzle check test, to test for a faulty diesel injector.

1.1.7 The systematic disabling of cylinders, one after the other, is called the cylinder balance test when dealing with faulty diesel injectors.

1.1.8 An injector supplies fuel, under pressure, to the exhaust chamber near the end of the exhaust stroke.

1.1.9 A glow plug gives light during Eskom's loadshedding or power cuts.

1.1.10 High pressure fuel lines are strong and are constructed out of very thin wall steel pipes.

(10 × 1) (10)

1.2 Study FIGURE 1 and label the different components of the diesel fuel system. Write the answer next to the question number (A–E) in the ANSWER BOOK.

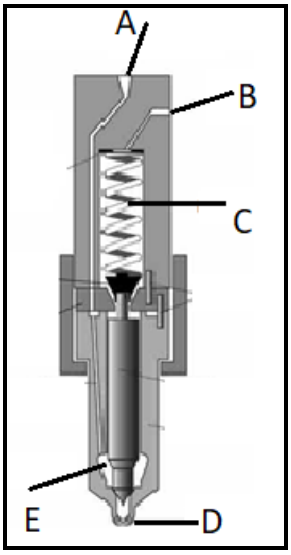

FIGURE 1 (5)

1.3 Explain the functions of the item represented by FIGURE 1. (2)

1.4 Complete the following sentence by filling in the missing word or words. Write only the word or words next to the question number (1.4.1–1.4.3) in the ANSWER BOOK.

1.4.1 The … separate the water from the diesel fuel.

1.4.2 The … create an air gap for the electric spark to jump across.

1.4.3 The … supply electric energy to the ignition system.

(3 × 1) (3)
[20]

QUESTION 2

2.1 Explain the automotive acronym, ABS. (2)

2.2 There are two possible options to ensure equal tyre wear and it is important to rotate the wheels every 10 000 km. Copy FIGURE 2 in the ANSWER BOOK and indicate, with arrows, the two options of the path of wheel rotation between the wheels.

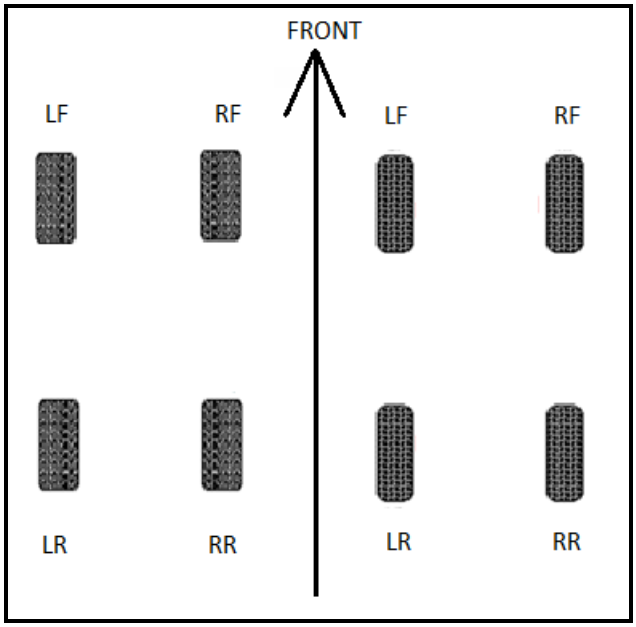

FIGURE 2 (4)

2.3 Make a neat labelled sketch showing the Macpherson suspension, indicating the shock absorber, coil spring, lower control arm and wheel/tyre. (4)

2.4 The main components of the drum brake system, and the functions thereof, is shown in column A and B. Choose a description from COLUMN B that matches a/an word/item in COLUMN A of the main components of the drum brake system. Write only the letter (A–G) next to the question number (2.4.1–2.4.5) in the ANSWER BOOK.

COLUMN A		COLUMN B	
2.4.1	Backing plate	A	incorporate the linings (friction material)
2.4.2	Brake drum	B	activate the brake shoes
2.4.3	Brake shoes	C	mounting area for all components
2.4.4	Wheel cylinder	D	keep brake shoes close to drums
2.4.5	Brake adjusters	E	provide friction surface for brake shoes
		F	pull brake shoes away from brake drums
		G	secure brake shoes against backing plate

(5 × 1) (5)

2.5 Study FIGURE 3 and label the different parts of the gearbox, marked (A–E). Write only the answer next to the question number (A–E) in the ANSWER BOOK.

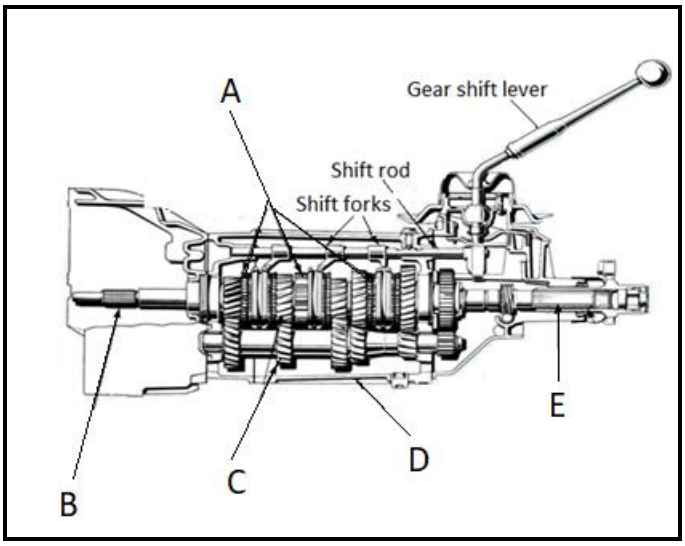

FIGURE 3

(5)
[20]

QUESTION 3

3.1 Make a neat labelled sketch that shows the oxygen-acetylene gas welding equipment. (13)

3.2 Study FIGURE 4 and label the different welding defects, marked (A–E). Write only the answer, next to the question number (A–E), in the ANSWER BOOK.

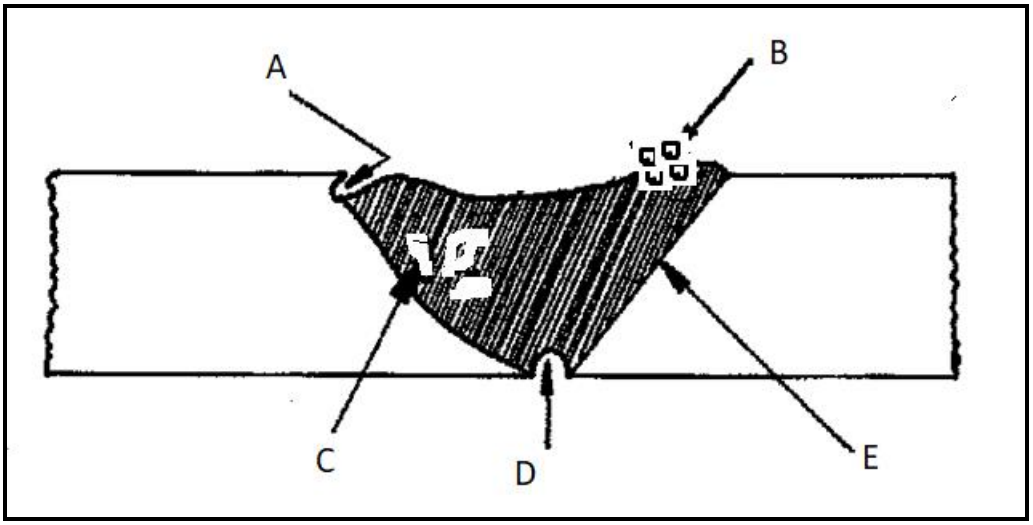

FIGURE 4 (5)

3.3 Make a neat labelled sketch showing the lap-joint in welding. (2)
[20]

QUESTION 4

4.1 Explain the term *a unit* in relation to electricity costing. (3)

4.2 The farmer is using electrical motors for most of the farm's maintenance activities. Choose a description from COLUMN B that matches a/an word/item in COLUMN A of the main components of the electrical motor. Write only the letter (A–G) next to the question number (4.2.1–4.2.5) in the ANSWER BOOK.

COLUMN A		COLUMN B	
4.2.1	Rotor	A	the stationary part holding the windings or permanent magnets
4.2.2	Stator	B	the moving part inside the motor
4.2.3	Windings	C	used to switch the input of certain AC and DC machines, consisting of slip ring segments
4.2.4	Commutator	D	wires that are laid in coils, usually wrapped around a laminated soft iron magnetic core
4.2.5	Shaft	E	AC or DC driven segments for welding
		F	holding the pulley
		G	holding the battery for electrical motor power

(5 × 1) (5)

4.3 Indicate whether the following statements are TRUE or FALSE. Choose the answer and write only 'True' or 'False' next to the question number (4.3.1–4.3.3) in the ANSWER BOOK.

4.3.1 Electrical motors work on the principle of electromagnetic reduction.

4.3.2 The strength of the induced current depends on the strength of the magnetic field.

4.3.3 An electric motor is an electric machine that converts electrical energy into mechanical energy.

(3 × 1) (3)

Copyright reserved

4.4 You need to pump water from a depth of 80 meters. The pump you will use work at 2 litres per second.

Calculate the total power needed for the electrical motor in kW.

HINT: $Power = \frac{height(l/\sec)}{60}$

(4)
[15]

QUESTION 5

5.1 Label the different components of this type of the roof construction, in FIGURE 5. Write the answer next to the question number (A–N) in the ANSWER BOOK.

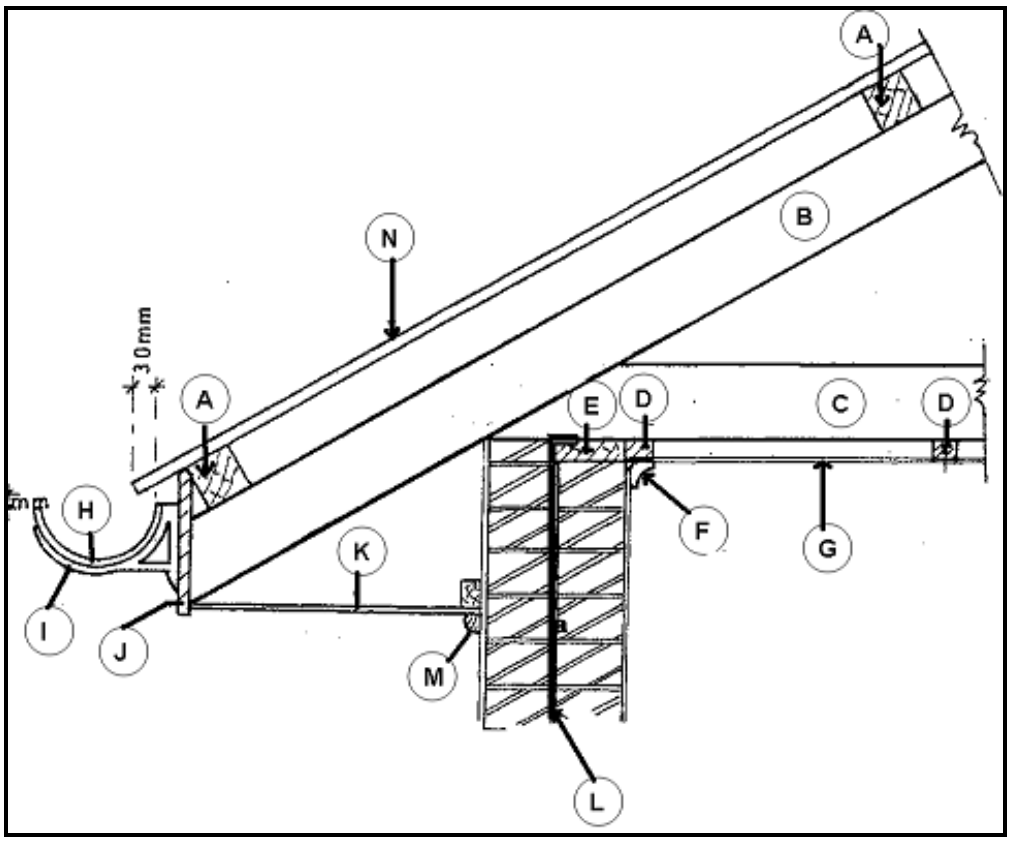

FIGURE 5 (14)

5.2 Calculate the quantity and total cost of the sand, stone and cement needed for the foundation of the external wall of a building, if the outside measurements of the corners are 15 m × 8 m. Work to the second decimal. Round off quantities to the next bag and cubic metre. Transport to the building plot and the tax is included in the costs.

Size of foundation Wall thickness Size of stone	0,7 m × 0,3 m 0,23 m 19 mm
Cement needed per m^3 – concrete Sand needed per m^3 – concrete Stone needed per m^3 – concrete	5,5 bag 0,77 m^3 0,50 m^3
Purchasing cost of consumables: • R55,50 per 50 kg bag cement • R50,60 per m^3 – sand • R140,10 per m^3 – stone	

(10)

5.3 Indicate whether the following statement is TRUE or FALSE. Choose the answer and write only 'True' or 'False' next to the question number (5.3) in the ANSWER BOOK.

The type of roof structure in FIGURE 5 is called a closed eave. (1)

[25]

TOTAL: 100

Copyright reserved