higher education & training

Department:
Higher Education and Training
REPUBLIC OF SOUTH AFRICA

N1000**(E)**(N22)H

NATIONAL CERTIFICATE

MAINTENANCE MANAGEMENT: FARMING N5

(4090535)

22 November 2018 (X-Paper)
09:00–12:00

Nonprogrammable calculators may be used.

This question paper consists of 10 pages.

Copyright reserved

DEPARTMENT OF HIGHER EDUCATION AND TRAINING
REPUBLIC OF SOUTH AFRICA

NATIONAL CERTIFICATE
MAINTENANCE MANAGEMENT: FARMING N5
TIME: 3 HOURS
MARKS: 100

INSTRUCTIONS AND INFORMATION

1. Answer ALL the questions.
2. Read ALL the questions carefully.
3. Number the answers according to the numbering system used in this question paper.
4. Sketches and diagrams should be neatly done in pencil.
5. Write neatly and legibly.

Copyright reserved

QUESTION 1

1.1 Choose a picture in COLUMN A that matches description from COLUMN A. Write only the letter (A–F) next to the question number (1.1.1–1.1.4) in the ANSWER BOOK.

COLUMN A		COLUMN B
1.1.1	Intake stroke	A 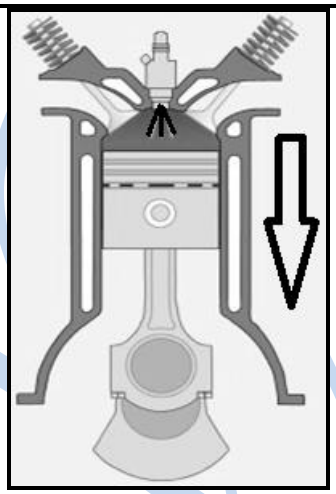
1.1.2	Compression stroke	
1.1.3	Combustion stroke	B 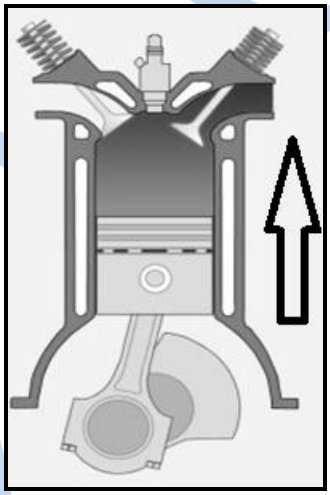
1.1.4	Exhaust stroke	C 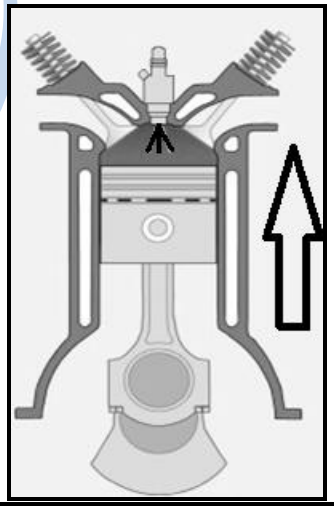

D

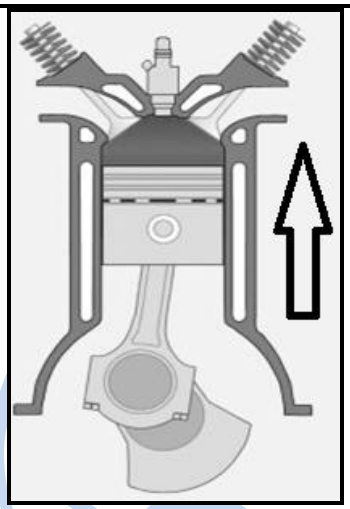

E

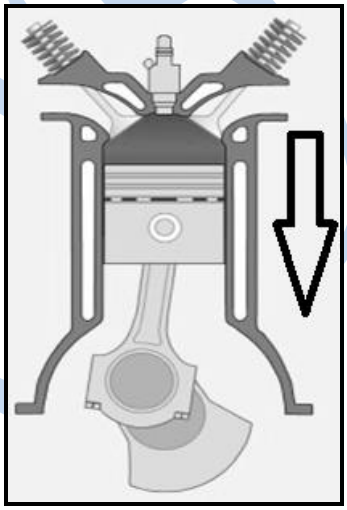

F

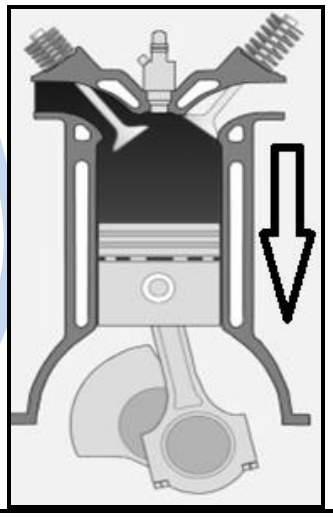

(4 × 1) (4)

Copyright reserved

1.2 Indicate whether the following statements are TRUE or FALSE. Choose the answer and write only 'True' or 'False' next to the question number (1.2.1–1.2.10) in the ANSWER BOOK.

1.2.1 At TDC both valves are open.

1.2.2 The diesel piston is designed with a special recess to allow higher compression ratios.

1.2.3 Piston rings are designed not to seal the combustion space.

1.2.4 The diesel engine does not have oil rings, only compression rings.

1.2.5 The connecting rod houses the big end and small end.

1.2.6 The flywheel reduces vibrations on the crankshaft during power strokes.

1.2.7 The cylinder valves act as gates.

1.2.8 A camshaft is a devise that changes a rotary motion into an up-and-down movement.

1.2.9 A cam lobe has two high spots and sits on the camshaft.

1.2.10 The valve timing is the precise timing of the opening and closing of the valves.

(10 × 1) (10)

1.3 Study FIGURE 1 and label the different components of the petrol ignition system. Write the answer next to the question number (A–E) in the ANSWER BOOK.

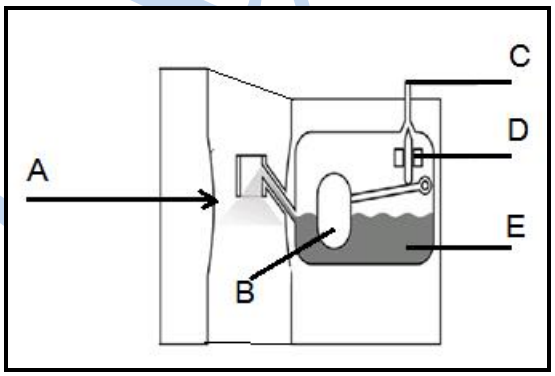

FIGURE 1

(6)
[20]

QUESTION 2

2.1 List ONE cause for each of the following faulty gearbox symptoms.

2.1.1 Transmission jumps out of direct drive only

2.1.2 Transmission jumps out of gear

2.1.3 Transmission shifts hard

2.1.4 Gear crunch during shifting

2.1.5 Gear noise

(5 × 1) (5)

2.2 Study FIGURE 2. Rearrange, by choosing from the following components, to indicate correct power flow from the list below. Write only the name of the component(s) next to the question number (2.2.1–2.2.7) in the ANSWER BOOK.

(Provide numbers per component so that it will be easy to identify them.)

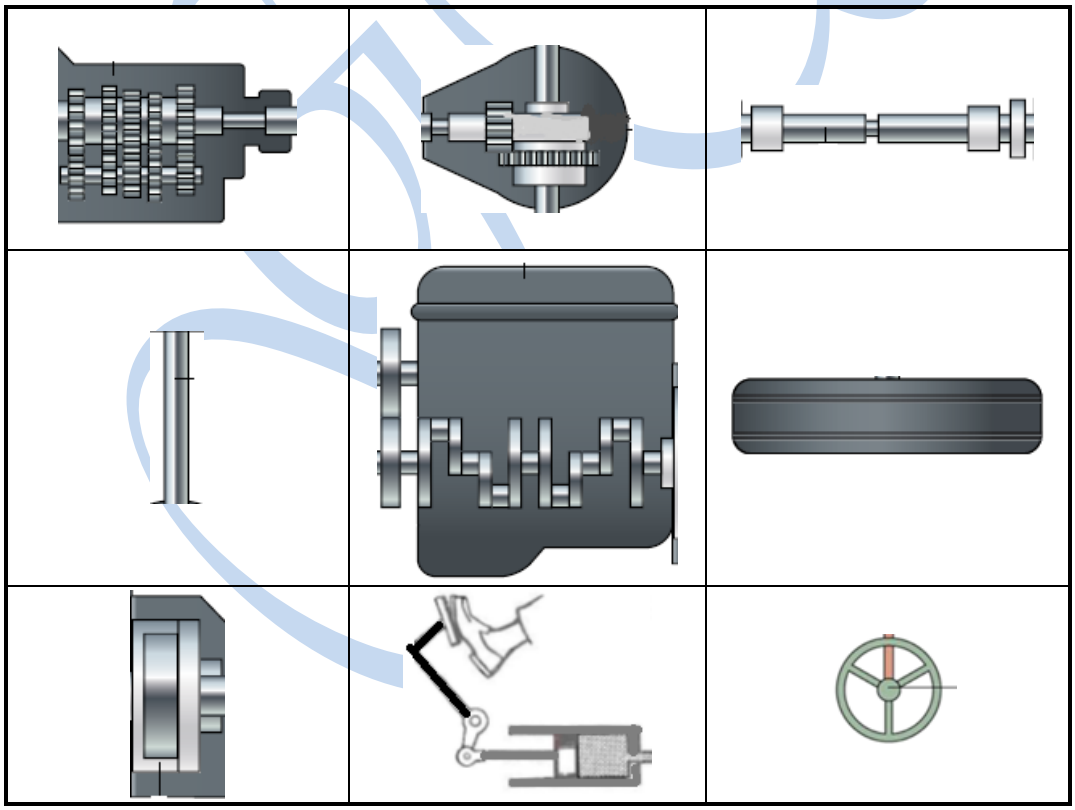

FIGURE 2 (7)

2.3 List FOUR types of braking systems. (4)

2.4 List FOUR types of wheel rims. (4)

[20]

QUESTION 3

3.1 Explain TWO differences between the *SMAW electrode* and *OAW filler rod.* (2 × 2) (4)

3.2 Describe the use of the OAW equipment by explaining how the pressure is set, the flame is lit and the neutral flame is set to start gas welding. (10)

3.3 List TWO advantages of gas brazing. (2)

3.4 Make a neat labelled drawing of the OAW defect undercut. (2)

3.5 List TWO safety rules applicable to gas cutting. (2)
[20]

QUESTION 4

4.1 Explain FIVE reasons why a battery will fail and become unusable. (5)

4.2 You need to fit two new circuit breakers in a DB box. Complete the following sentence(s) by filling in the missing word(s). Write only the word(s) next to the question number (4.2.1–4.2.5) in the ANSWER BOOK.

4.2.1 The maximum circuit breaker value for a plug line is … Amp.

4.2.2 The maximum circuit breaker value for a light line is … Amp.

4.2.3 The minimum wire size diameter for a plug line is … mm.

4.2.4 The minimum wire size diameter for a light line is … mm.

4.2.5 The … is used to detect any current flow to ground.

(5 × 1) (5)

Copyright reserved

4.3 Choose a picture from COLUMN B that matches a description in COLUMN A. Write only the letter (A–D) next to the question number (4.3.1–4.3.3) in the ANSWER BOOK.

COLUMN A		COLUMN B
4.3.1	DC shunt motor	A 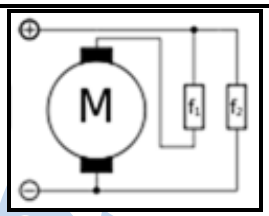
4.3.2	DC series motor	B 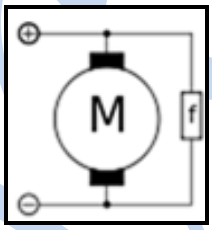
4.3.3	DC compound motor	C 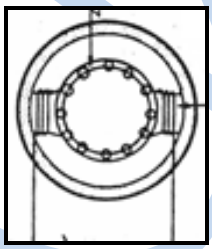
		D 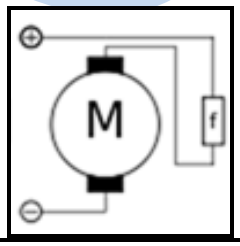

(3 × 1) (3)

4.4 Indicate whether the following statements are TRUE or FALSE. Choose the answer and write only 'True' or 'False' next to the question number (1.1–1.10) in the ANSWER BOOK.

4.4.1 You can't change the turning direction of a three-phase electrical motor.

4.4.2 You can only change the turning direction of a single-phase electrical motor.

(2 × 1) (2)

[15]

QUESTION 5

5.1 Study FIGURE 3. You need to build a roof over an 8 meter span, wall to wall; the building will be 8 m × 10 m corner to corner. The total roof surface is 200 m². Answer the following questions:

Span in meter	Construction	Size of trusses in mm × mm		
		1	**2**	**3**
		Rafter	Tie beam	Trusses
0–4.5	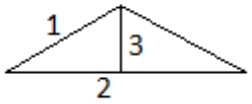	114 × 38	114 × 38	114 × 38
4.6–6.00	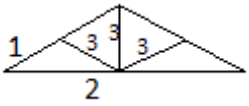	114 × 38	114 × 38	114 × 38
6.10–7.5	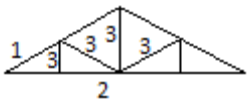	114 × 38	114 × 38	114 × 38
7.6–10.50	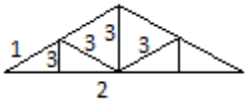	152 × 38	152 × 38	114 × 38

FIGURE 3

5.1.1 Make a drawing of the type of roof structure.

5.1.2 Identify the size of the trusses.

5.1.3 Identify the size of the tie beams.

5.1.4 Identify the size of the rafters.

5.1.5 Will this be a single- or double-pitched roof?

(5 × 1) (5)

5.2 Study FIGURE 4. You need to fit gutters and down pipes for your roof as in QUESTION 5.1, FIGURE 3. Answer the following questions.

Roof drainage area	Gutter size in mm		Down-pipe size in mm	
	Half-round	Rectangular	Round	Rectangular
15 m²	75		75	
20 m²	100		75	
40 m²	125		75	
60 m²	150		100	
80 m²		125 × 100		100 × 100
100 m²		150 × 100		100 × 100
125 m²		200 × 100		125 × 100

FIGURE 4

5.2.1 Identify the roof drainage area for your roof type. (2)

5.2.2 Identify the gutter size in mm. (1)

5.2.3 Identify the down-pipe size in mm. (1)

5.2.4 Will you use a half-round or rectangular gutter? (1)

5.3 Name FIVE factors that are important to remember when installing a new sewerage line. (5)

5.4 Name FIVE important facts when maintaining hot-water installations. (5)

5.5 Name FIVE important things when choosing the correct size electrical motor for a specific purpose. (5)

[25]

TOTAL: 100

Copyright reserved