higher education & training

Department:
Higher Education and Training
REPUBLIC OF SOUTH AFRICA

MARKING GUIDELINE

NATIONAL CERTIFICATE

MAINTENANCE MANAGEMENT: FARMING N5

3 June 2021

This marking guideline consists of 6 pages.

Copyright reserved

QUESTION 1

1.1	1.1.1	C		
	1.1.2	D		
	1.1.3	A		
	1.1.4	A		
	1.1.5	B		
	1.1.6	B		
	1.1.7	B		
	1.1.8	D		
	1.1.9	A		
	1.1.10	C		
			(10 × 1)	(10)
1.2	1.2.1	B		
	1.2.2	D		
	1.2.3	F		
	1.2.4	C		
	1.2.5	A		
			(5 × 1)	(5)
1.3	1.3.1	D		
	1.3.2	E		
	1.3.3	B		
	1.3.4	A		
	1.3.5	C		
	1.3.6	G		
			(6 × 1)	(6)
1.4	1.4.1	B		
	1.4.2	A		
	1.4.3	D		
	1.4.4	E		
			(4 × 1)	(4)
				[25]

QUESTION 2

2.1
2.1.1 C
2.1.2 E
2.1.3 B
2.1.4 D
2.1.5 A

(5 × 1) (5)

2.2
2.2.1 Hygroscopic
2.2.2 Absorb
2.2.3 Boiling
2.2.4 Not
2.2.5 Standards

(5 × 1) (5)

2.3

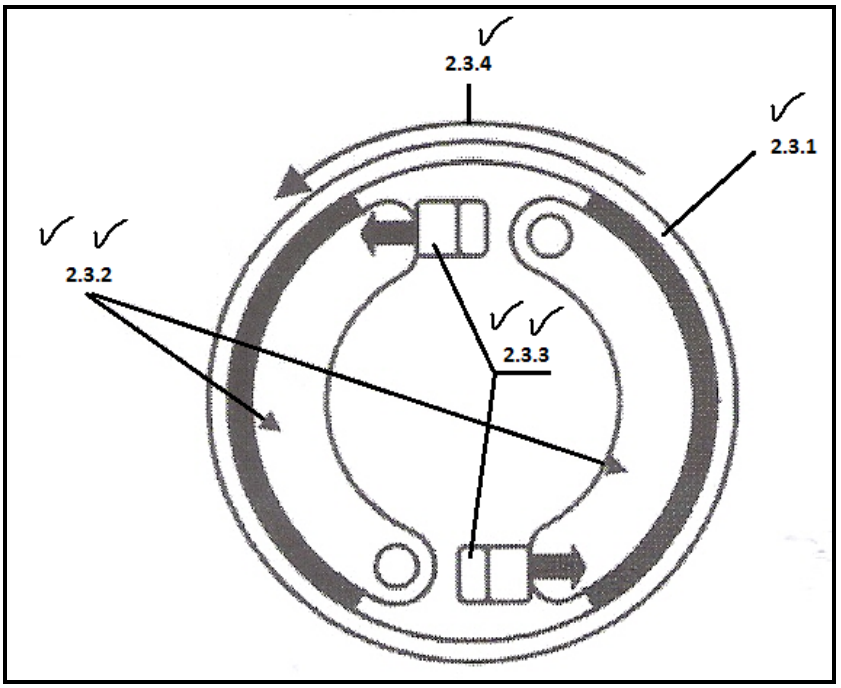

(6)

2.4
2.4.1 C
2.4.2 E
2.4.3 A
2.4.4 B

(4 × 1) (4)

2.5
- Split rim
- Inflate behind a strong cage

(Any relevant 2 × 1) (2)

2.6
2.6.1 True
2.6.2 True
2.6.3 True

(3 × 1) (3)

[25]

QUESTION 3

3.1
- Store cylinders in a cool dry place
- Not in direct sunlight
- Do not bump or roll cylinders
- Store cylinders upright
- Store full and empty cylinders separately
- Store oxygen and acetylene cylinders separately (Any 5 × 1) (5)

3.2

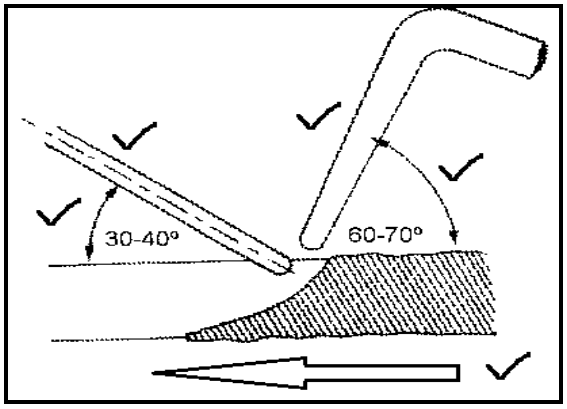

(The angles can be between the parameters indicated in the drawing.) (5)

3.3
- Close the acetylene control valve first then the oxygen heating valve.
- Close both cylinder valves.
- Open each control valve in turn to release the pressure in the hose and then close again.
- Slack off the pressure adjusting screws on both regulators (in other words, turn out the regulator screws).
- The equipment may be dissembled and put away. (5)

[15]

QUESTION 4

4.1 Rt = R1 + R2
Rt = 4 + 6
Rt = 10 Ω (2)

4.2 (1 Hp = 750 watt)
kW = (Hp × 750 W)/1 000
kW = (10 × 750)/1 000
kW = (7 500 watt)/1 000✓
kW = 7,5 kW ✓✓ (3)

4.3 5 × 300 W = 1 500 W✓
12 hrs/r × 1 500 W = 18 000 W✓
18 000 × 30 days = 540 000 W✓
540 000/1 000 = 540 units✓
540 × R1,50 = R810,00✓ (5)

[10]

QUESTION 5

5.1
A Lavatory pan (toilet)
B Cistern
C Water seal
D Sewer pipe
E Vent pipe
F Inspection chamber or drain
G Access eye or inspection eye

(7 × 1) (7)

5.2
- To prevent unpleasant odours from the sewage drain from entering the house.
- Keep unwanted insects/rats, etc. from entering the house from the sewer pipe. (2 × 1) (2)

5.3
- Allows sewage gases to escape
- Prevents siphoning of the water seal
- Promote the flow of sewage (Any 2 × 1) (2)

5.4
- At points where the slope changes
- Where branch drains join (2 × 1) (2)

5.5
- The drain pipes must be laid in a straight line with a uniform slope between inspection chambers.
- The slope of the pipes should not be less than 1:40 or 2,5% or more than 1:6.
- Joints should be made according to manufacturers' instructions and must be watertight.
- Bell ends of pipes must face upstream.
- Inside joints must be smooth without obstruction.
- Flexible construction methods are recommended.
- In swelling soils the pipe must be enveloped in sand 100 mm thick.
- Sewer pipes should be laid at least 1 metre from walls, not near trees
- Branch drains should join the main drain at an acute angle in the direction of flow.
- For inspection and cleaning purposes, inspection chambers must be installed. (Any relevant 2 × 1) (2)

Copyright reserved

5.6
- Hang a truss upside-down across the span of the building, at each gable end.
- Turn the trusses over and plumb them.
- Secure the trusses at the bottom with anchor rods and brace them temporarily from the rafter to the wall plate.
- Fix a line from one ridge to the other of the trusses.
- Hang the other trusses, one after the other, upside-down between the walls. Turn each one over and plumb it as explained above, before hanging the next one. Brace them temporarily.
- Nail the purlins according to the measurements of the roof covering (the sheets) and secure them.
- Fix a line at the bottom end of the rafters, along the gable ends of the roof, at the level of the required overhang. Cut off the ends of the rafters according to the line.
- Cut off the purlins to the correct length.
- Build up the gables.
- Nail the fascia boards on the purlins and rafter ends. (10 × 1) (10)

[25]

TOTAL: 100

Copyright reserved