higher education & training

Department:
Higher Education and Training
REPUBLIC OF SOUTH AFRICA

MARKING GUIDELINE

NATIONAL CERTIFICATE

MAINTENANCE MANAGEMENT: FARMING N4

16 NOVEMBER 2018

This marking guideline consists of 5 pages.

Copyright reserved

QUESTION 1

1.1
- Always wear protective clothing.
- No loose hanging clothes.
- No jewellery.
- Do not lean against moving machines.
- Do not leave machines on unattended. (Any applicable 5 × 1) (5)

1.2
1.2.1 D
1.2.2 A
1.2.3 C
1.2.4 C
1.2.5 D
1.2.6 D
1.2.7 D
1.2.8 C
1.2.9 A
1.2.10 D

(10 × 1) (10)
[15]

QUESTION 2

2.1
- Inlet valve close✓
- Outlet valve open✓
- Piston moving upwards✓
- and push fumes✓ out into exhaust✓

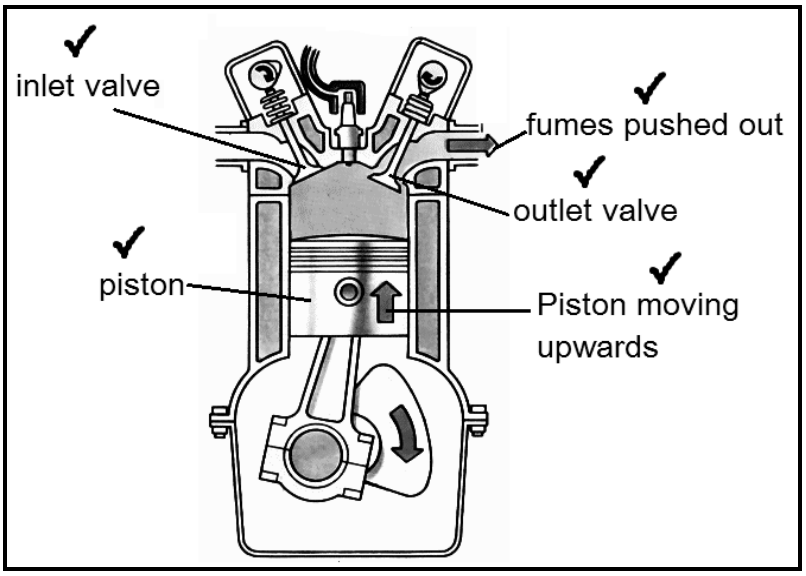

(Any 10 × 1) (10)

2.2
- The cam presses onto the cam follower or tappet.
- The cam follower presses against the push rod.
- The push rod presses against the valve rocker.
- The rocker rotates on the rocker shaft.
- The valve rocker presses against the valve stems and opens the valve against the pressure of the valve spring.
- When the cam moves away from the cam follower the valve spring closes the valve (Any applicable 6 × 1) (6)

2.3

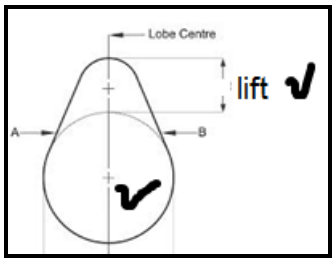

(2)

2.4
A Cylinder
B Piston
C Gudgeon pin
D Connecting rod
E Flywheel
F Crank shaft or main journal
G Big-end or rod end
H Crank shaft or main journal (8)
[26]

QUESTION 3

3.1 3.1.1 False✓
A dumping site has to be fenced.✓ (2)

3.1.2 False✓
It is the responsibility of the employer to organise safety courses.✓ (2)

3.1.3 True✓ (1)

3.1.4 True✓ (1)

3.1.5 True✓ (1)

3.1.6 False✓
Persons should not be allowed to ride in the bucket of loaders✓ (2)

3.1.7 True✓ (1)
[10]

QUESTION 4

4.1
- heat
- radiation

(Any applicable 2 × 1) (2)

4.2

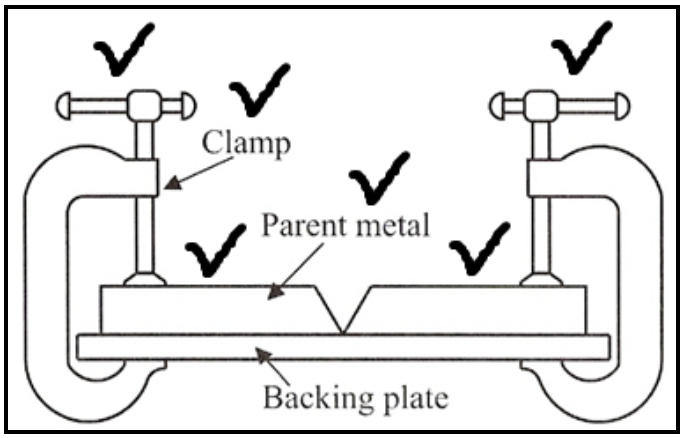

(Any applicable 6 × 1) (6)

4.3 Alternating current (AC) and Direct current (DC) (2)

4.4
- The work piece heated up.
- The work piece expanded.
- The work piece cooled off.
- The work piece contracted.
- The work piece buckled due to internal stress.

(Any applicable 4 × 1) (4)
[14]

QUESTION 5

5.1 5.1.1

$P = V \times I$ ✓
$P = 230 \times 10$
$P = 2300\ Watt$ ✓
$P = 2.3\ kW$ ✓

5.1.2

$3hours \times 30days = 300\ hours$✓
$300 \times 2.3 = 690k\ W.h$✓
$690 \times R3.00 = R2070$✓

(2 × 3) (6)

5.2 When a current✓ passes through the rotor,✓ it induces a magnetic field✓ around the rotor. When this rotor is within a magnetic field of the field coils,✓ the induced magnetic field in the rotor pushes✓ against the magnetic field around the stator and causes movement✓ of the rotor. (Any applicable 6 × 1) (6)

5.3
- Never measure the resistance of a component when power is connected to the component.
- Remove at least one side of the component from the rest of the circuit.
- Do not touch the probes because the reading will not be accurate.
- When measuring resistance, you must also connect the meter parallel to the component to be measured.
- Work safely.

(Any applicable 3 × 1) (3)
[15]

QUESTION 6

6.1 6.1.1 $50 \times 100 = 5000\ mm$✓
$\frac{5000}{1000}$ = 5 m✓

6.1.2 $6.2 \times 1000 = 6200\ mm$✓
$\frac{6200}{100}$= 62 mm✓

(2 × 2) (4)

6.2 6.2.1 weaker
6.2.2 smallest quantity
6.2.3 lengthened
6.2.4 should not
6.2.5 ringing
6.2.6 cavity walls
6.2.7 should
6.2.8 soft wood

(8 × 1) (8)

6.3 6.3.1 False
6.3.2 True
6.3.3 False
6.3.4 False
6.3.5 False
6.3.6 True
6.3.7 False
6.3.8 True

(8 × 1) (8)
[20]

TOTAL: 100

Copyright reserved