higher education & training

Department:
Higher Education and Training
REPUBLIC OF SOUTH AFRICA

MARKING GUIDELINE

NATIONAL CERTIFICATE

MAINTENANCE MANAGEMENT: FARMING N4

30 MAY 2019

This marking guideline consists of 5 pages.

Copyright reserved

QUESTION 1

1.1
- Purpose of the building
- Location
- Type of maintenance to be carried out
- Size and height of building
- Type of structure (bricks, sheet metal, et cetera)
- Type of implements
- Floor
- Water and electricity needs
- Wind direction
- Types of doors
- Ventilation options
- Ablution
- Safety
- Wash-bay facilities
- Future expansions (Any applicable 5 × 1) (5)

1.2
1.2.1 D
1.2.2 A
1.2.3 C
1.2.4 C
1.2.5 D
1.2.6 D
1.2.7 D
1.2.8 C
1.2.9 A
1.2.10 D

(10 × 1) (10)

1.3
- Put a round object through the centre hole of the stone.
- Keep the stone in the air with the object in the hole.
- Gently hit the stone with a non-metal object on four places 90° apart.
- A high-pitch tone (sharp ring) indicates the stone is not broken and in a good order.
- A low-pitch tone (dull sound) indicates the stone is broken or cracked and should not be used. (5)

[20]

QUESTION 2

2.1 2.1.1 Petrol is burned✓ inside the engine✓ above the pistons.✓ (3)

2.1.2 All petrol engines use an electric spark✓ to ignite the air-fuel mixture✓ in the combustion chamber.✓ (3)

2.2
- The piston crowns are designed to improve compression ratios, mixing the air with the diesel fuel for smooth burning of the air/fuel mixture.
- It creates a vacuum in the engine cylinder during the intake stroke.
- It compresses the air during the compression stroke.
- The piston transfers the combustion pressure to the connecting rod and crankshaft during combustion.
- It forces the exhaust gasses out of the cylinder into the exhaust system. (5)

2.3

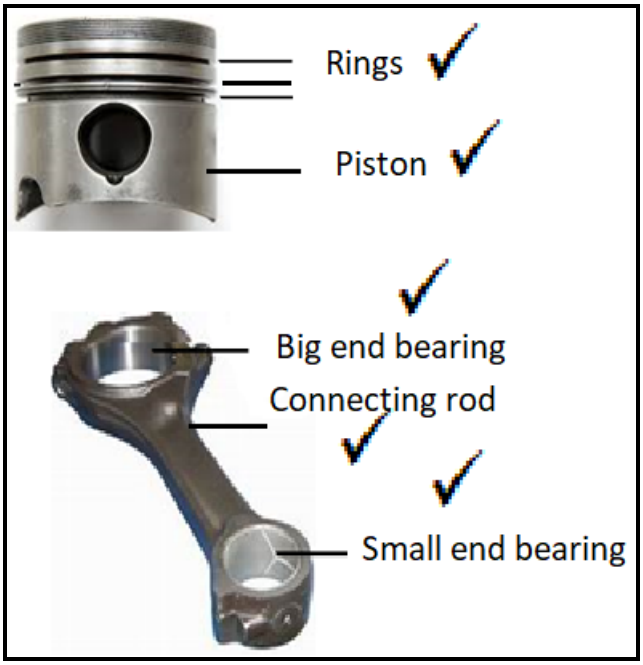

(5)

2.4
A Air cleaner or air cleaner cover
B Carburettor
C Tappet cover
D Exhaust manifold (Outlet manifold)
E Inlet manifold (5)

2.5
- Mounting point for connecting rods
- Changes reciprocating movement of pistons to rotary motion
- Heavier flywheel rotates crankshaft during compression strokes
- Mounting point for flywheel and vibration damper
- Incorporates oil galleries for main bearings

(Any applicable 4 × 1) (4)

[25]

QUESTION 3

3.1 True
3.2 True
3.3 False
3.4 True
3.5 True
3.6 True
3.7 False
3.8 False
3.9 True
3.10 False

(10 × 1) **[10]**

QUESTION 4

4.1
- Heat (infra-red)
- Radiation (X-rays, ultra-violet)
- Smoke or fumes
- Spatter or sparks (Any applicable 4 × 1) (4)

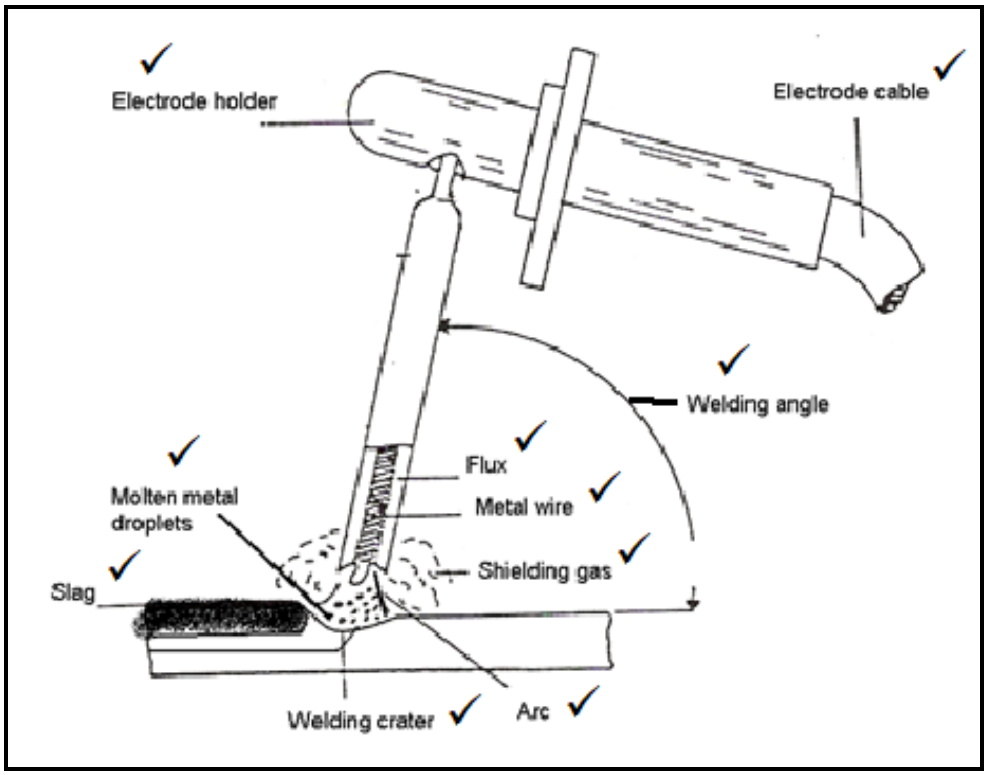

(10)

4.3 1G (1)

[15]

QUESTION 5

5.1 5.1.1 $P = V \times I$✓
$P = 230 \times 15$
$P = 3450\ Watt$✓
$P = 3.45\ kW$✓ (3)

5.1.2 $10\ hours \times 30\ days = 300\ hours$✓
$300 \times 3.45 = 1035\ kW.h$✓
$1035 \times R3.50 = R3622.5$✓ (3)

5.2
- Type of material
- Cross-section area of conductor
- Length of the conductor
- Temperature of conductor (Any applicable 4 × 1) (4)

[10]

QUESTION 6

6.1 6.1.1 $200 \times 100 = 20000\ mm$✓
$\frac{20000}{1000}$ = 20 m✓

6.1.2 $15 \times 1000 = 15000\ mm$✓
$\frac{15000}{100}$ = 150 mm✓

(2 × 2) (4)

6.2 6.2.1 ventilation
6.2.2 site plan
6.2.3 Swelling soils
6.2.4 Concrete
6.2.5 Face bricks
6.2.6 3:4:5
6.2.7 700 × 300
6.2.8 jointer

(8 × 1) (8)

6.3 6.3.1 True
6.3.2 False
6.3.3 False
6.3.4 False
6.3.5 False
6.3.6 True
6.3.7 True
6.3.8 False

(8 × 1) (8)

[20]

TOTAL: 100

Copyright reserved