higher education & training

Department:
Higher Education and Training
REPUBLIC OF SOUTH AFRICA

MARKING GUIDELINE

NATIONAL CERTIFICATE

MAINTENANCE MANAGEMENT: FARMING N4

7 JUNE 2018

This marking guideline consists of 6 pages.

Copyright reserved

QUESTION 1

1.1
- Employees should be encouraged to wear safety clothing and equipment at all times.
- According to law, all workplaces should have an escape plan for emergencies.
- Employees must be informed and trained to adhere to and comply with the escape procedure.
- Training to adhere to and comply with safety rules and regulations must be provided for all employees.
- Communication systems should be readily available during emergencies. Telephones or two-way radios are very important. (5 × 1) (5)

1.2
1.2.1 I
1.2.2 J
1.2.3 G
1.2.4 H
1.2.5 E
1.2.6 F
1.2.7 C
1.2.8 D
1.2.9 A
1.2.10 B

(10 × 1) (10)
[15]

QUESTION 2

2.1
- Inlet valve opens.
- Outlet valve closes.
- Piston moves downwards
- and creates a vacuum in cylinder.
- Air-fuel mixture is drawn into cylinder. (5 × 1) (5)

2.2

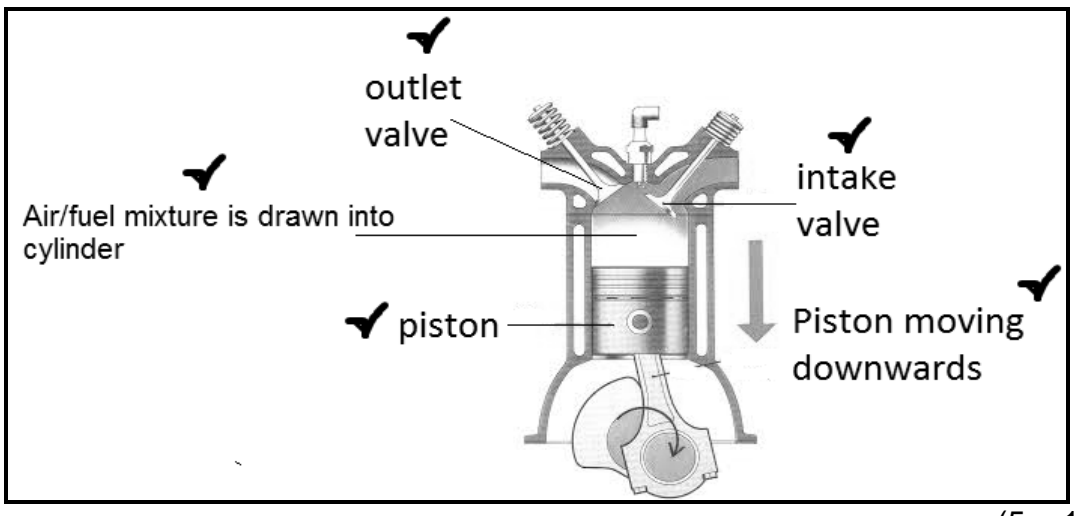

(5 × 1) (5)

2.3 • The air-cooled system utilises air✓ to remove the heat✓ from the engine by means of fins✓ while the water-cooled system utilises water✓ to remove the heat✓ from the engine into a radiator✓ where it cools the water again. (6 × 1) (6)

2.4 • Force-feed
• Splash feed (2)

2.5
A Crankshaft or endplate
B Pilot bearing
C Flywheel
D Release bearing
E Clutch plate/disk
F Pressure plate
G Input shaft
H Release fork (8)
[26]

QUESTION 3

3.1 False
It is the responsibility of the employer to provide a safe place. (2)

3.2 False
It is the responsibility of the employee to report unsafe conditions. (2)

3.3 True (1)

3.4 True (1)

3.5 True (1)

3.6 False
Do not run electrical cables/leads under carpets. (2)

3.7 True (1)
[10]

QUESTION 4

4.1
- Tapping/chipping
- Scratching/striking (2)

4.2

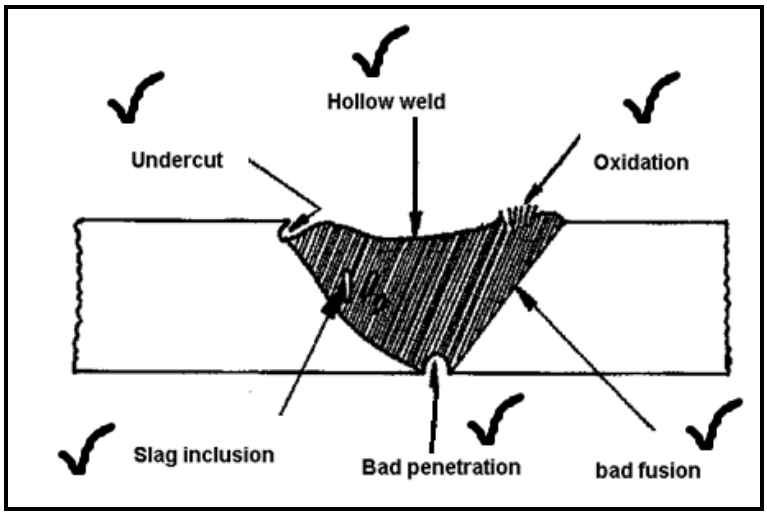

(Any applicable 6 × 1) (6)

4.3 High quality,✓ low hydrogen✓ welding purpose mild steel
(Any applicable 2 × 1) (2)

4.4
- Bad fusion is obtained.
- A rough weld is the result.
- There are plenty of spatters.
- The arc is unstable and difficult to control. (Any applicable 4 × 1) (4)

[14]

QUESTION 5

5.1 $\frac{1}{Rt} = \frac{1}{R1} + \frac{1}{R2} + \frac{1}{R3}$✓

$\frac{1}{R} = \frac{1}{4} + \frac{1}{6} + \frac{1}{8}$✓

$\frac{1}{R} = \frac{6}{24} + \frac{4}{24} + \frac{3}{24}$✓

$\frac{1}{R} = \frac{13}{24}$✓

$\frac{R}{1} = \frac{24}{13}$✓

$Rt = 1{,}846\ \Omega$✓ (6)

5.2 By using the left hand, the index finger✓ in the direction of the magnetic flux✓ flows North to South, the middle finger✓ indicates the flow of the current✓ in the conductor and the thumb✓ indicates the direction✓ of movement. (6)

5.3 5.3.1 Amps/Amperage
5.3.2 Volts/Voltage
5.3.3 Ohms

(3 × 1) (3)
[15]

QUESTION 6

6.1

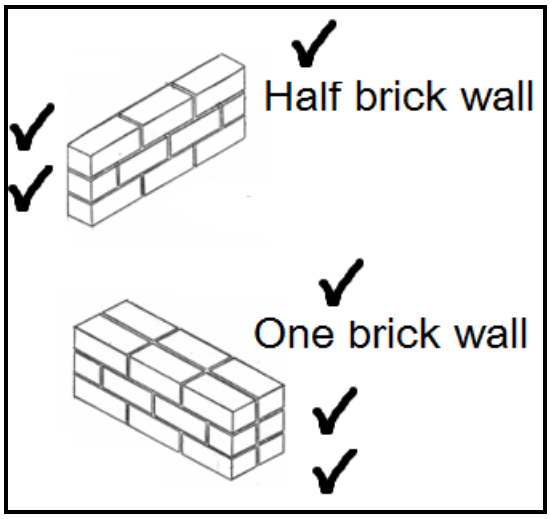

(6)

6.2
- *Concrete* is used for foundations and floors.
- *Mortar* is used between bricks when building walls.
- *Plaster* is used on the inside or outside of walls to finish it off. (3 × 1) (3)

6.3

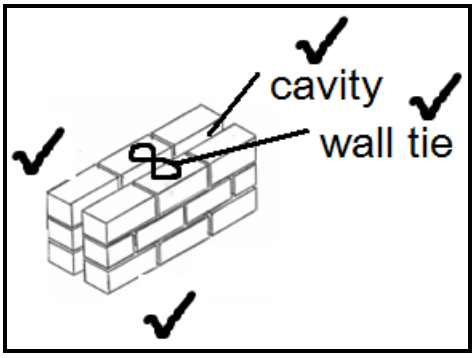

(4)

6.4
- Heat isolation
- Water isolation
- Allow for electrical and water piping (2 × 1) (2)

6.5
- Lime-plastered walls have lasted for thousands of years, are unaffected by water and will not soften or dissolve like gypsum plaster or drywall.
- Unlike gypsum plaster or drywall, lime plaster is sufficiently durable and resistant to the elements to be used for exterior plastering.
- When set, lime plaster becomes an extremely hard and solid mass that is extremely durable.
- Compared to cement plaster, lime plaster is less brittle and cracks much less, requiring no expansion joints as a result.
- The elevated pH of the lime in the plaster will also act as a fungicide; mould will not grow in lime plaster or on nearby wood.

(Any applicable 2 × 1) (2)

6.6 Building profiles are wooden/steel structures✓ to help with the layout of foundations✓ and walls.✓ (3)

[20]

TOTAL: 100

Copyright reserved