higher education & training

Department:
Higher Education and Training
REPUBLIC OF SOUTH AFRICA

MARKING GUIDELINE

NATIONAL CERTIFICATE

COMPUTER PRINCIPLES N4

8 AUGUST 2018

This marking guideline consists of 5 pages.

Copyright reserved

QUESTION 1

1.1
1.1.1 C
1.1.2 C
1.1.3 A
1.1.4 D
1.1.5 A
(5 × 1) (5)

1.2
- Fast
- Simple technology (2)

1.3 Compact Disk Recordable (2)

1.4 Random Access Memory (2)
[11]

QUESTION 2

2.1
- Rom/Read only memory
- Prom/programmable read only memory
- UV-prom/Eprom/erasable programmable read only memory (3 × 2) (6)

2.2 Sec, min, milliseconds, nanoseconds, hours, etc. (5)
[11]

QUESTION 3

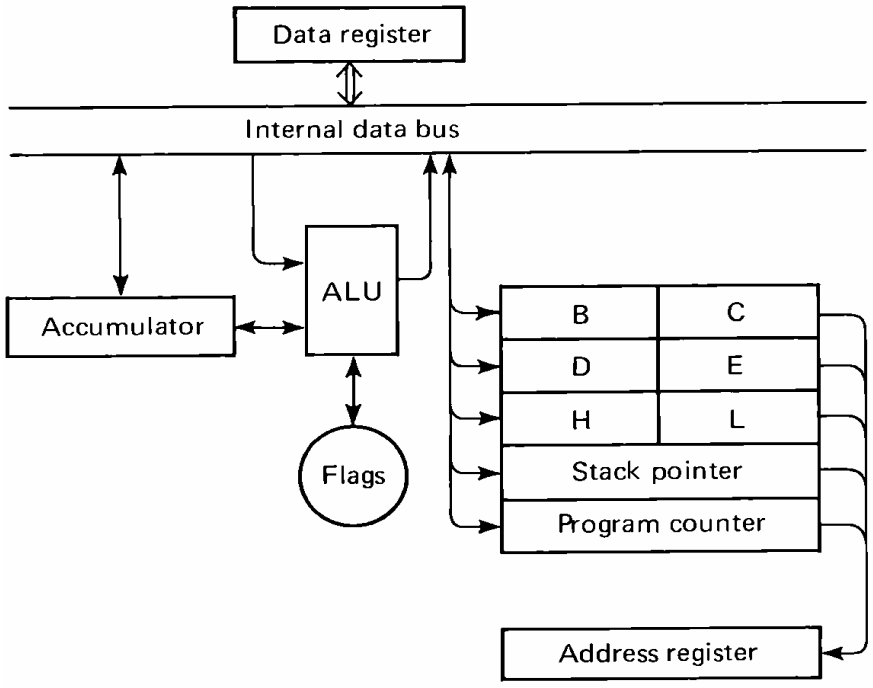

Any sketch of the 8080/8085/z80/mc6800 etc. will be accepted. **[10]**

QUESTION 4

4.1 A minicomputer is a powerful, small in size, expensive and can function as a file server in a Local Area Network.

OR

A minicomputer is a type of computer that possesses most of the features and capabilities of a large computer but is smaller in physical size. A *minicomputer* fills the space between the mainframe and microcomputer, and is smaller than the former but larger than the latter. (4)

4.2
- Make use air-conditioner.
- Ensure that the temperature range is 16 °C – 23 °C.
- Make sure that the air-conditioner controls the temperature at the set value.
- Should the air-conditioner fails, switch off the computer.
- Keep the door closed to keep the temperature in the computer room constant. (5)

4.3 When the write-protect notch is activated no content can be altered, the files can only be read from the floppy. When the write-protect notch is not activated the content can be read and changed. (2)

[11]

QUESTION 5

5.1
- Control memory
- Request
- File management
- Storage (4)

5.2 The architecture of a subroutine
The subroutine is an important part of any computer system's architecture. A subroutine is a group of instructions that usually performs one task, it is a reusable section of the software that is stored in memory once, but used as often as necessary. The subroutine structure is organized serially with flow from task to task and it is suitable for small programs with few processing options and low complexity.

The TWO basic instructions associated with subroutines.
- Call
- Return (7)

[11]

QUESTION 6

6.1
- Registration lists
- Class lists
- Report cards
- Progress reports (4)

6.2 6.2.1
- It is characterised by independent sections
- Each module is coded and tested separately

6.2.2
- It is characterised by one whole section
- The program is being tested as a whole (4)

6.3
- A microprocessor is a single chip that can execute pneumonic's like LD, LDA, ADD, SUB, etc. to obtain the desired result.
- A PC contains a CPU that is able to execute programs with the extensions like EXE or COM to obtain the desired result. (4)

[12]

QUESTION 7

7.1
7.1.1 Sequential Access Storage
7.1.2 Stored data
7.1.3 Terminator
7.1.4 Manual input
7.1.5 Magnetic Disk
7.1.6 Flow line/connecting line
7.1.7 Decision
7.1.8 Predefined Process
7.1.9 Direct Access Storage

(9 × 1) (9)

7.2
STEP 1: Define the problem
STEP 2: Write algorithm
STEP 3: Draw a flowchart
STEP 4: Write program
STEP 5: Test the program
STEP 6: Debug the program
STEP 7: Compile documentation (7)

[16]

QUESTION 8

8.1
- NEXT without FOR
- FOR without NEXT
- Division by zero
- Overflow
- Undefined label or subroutine (Any FOUR)

OR

- Debugging errors
- False assumptions
- Linkage errors
- Logical errors
- Operational errors
- Test data errors (Any FOUR)

(Any 4 × 1) (4)

8.2 Compiler – take code of program and provide exe file.
Interpreter – take code line by line and execute. (2 × 2) (4)
[8]

QUESTION 9

```
10 REM QUESTION 8✓
15 '= 0: DIM N(10)✓✓
20 FOR A = 1 TO 10✓✓
30 INPUT N(A)✓
40 IF N(A) > ' THEN ' = N(A)✓
50 NEXT A✓
60 CLS
70 PRINT 'HIGHEST/BIGGEST = H'✓
80 END✓
```

[10]

TOTAL: 100

Copyright reserved