higher education & training

Department:
Higher Education and Training
REPUBLIC OF SOUTH AFRICA

MARKING GUIDELINE

NATIONAL CERTIFICATE

PATTERN CONSTRUCTION N4

16 NOVEMBER 2018

This marking guideline consists of 9 pages.

Copyright reserved

SECTION A

QUESTION 1

1.1 F
1.2 G
1.3 E
1.4 C
1.5 H
1.6 I
1.7 J
1.8 A
1.9 D
1.10 B

(10 × 1) **[10]**

QUESTION 2

2.1 2.1.1 Cutting of pattern into sections to acquire fullness, e.g. pleats, gathers, tucks, etc.

2.1.2 Even distribution of fullness without forming gathers

2.1.3 Swinging of an arc from a certain fixed point

2.1.4 The act of placing the pattern in line with the other traced section

2.1.5 Two or more lines running the same distance apart.

(5 × 2) (10)

2.2 2.2.1 Scye
2.2.2 Bust control dart
2.2.3 Squaring
2.2.4 Draping
2.2.5 Lining
2.2.6 Planning
2.2.7 Bust prominence
2.2.8 Pattern line
2.2.9 Body rise
2.2.10 Two-piece sleeve

(10 × 1) (10)
[20]

Copyright reserved

QUESTION 3

3.1
- Waist
- Hips
- Bust
- Arm

(Any 3 × 1) (3)

3.2
- Inside leg
- Outside leg
- Body rise
- Hips
- Waist
- Knee width
- Hem width
- Waist

(Any 3 × 1) (3)

3.3 3.3.1 Side seam length taken from the natural waist to the floor or as desired

3.3.2 Over the shoulder blades to where the arms join the body

3.3.3 From the nape of the neck down the centre back to the waist line

3.3.4 Taken from the side seam waist to the hip line while the person is standing

(4 × 1) (4)
[10]

QUESTION 4

4.1 C
4.2 B
4.3 D
4.4 B
4.5 B
4.6 C
4.7 C
4.8 B
4.9 C
4.10 B

(10 × 1) **[10]**

TOTAL SECTION A: 50

Copyright reserved

SECTION B

QUESTION 5

5.1 LADIES SKIRT BLOCK, SIZE 13, FIFTH SCALE.

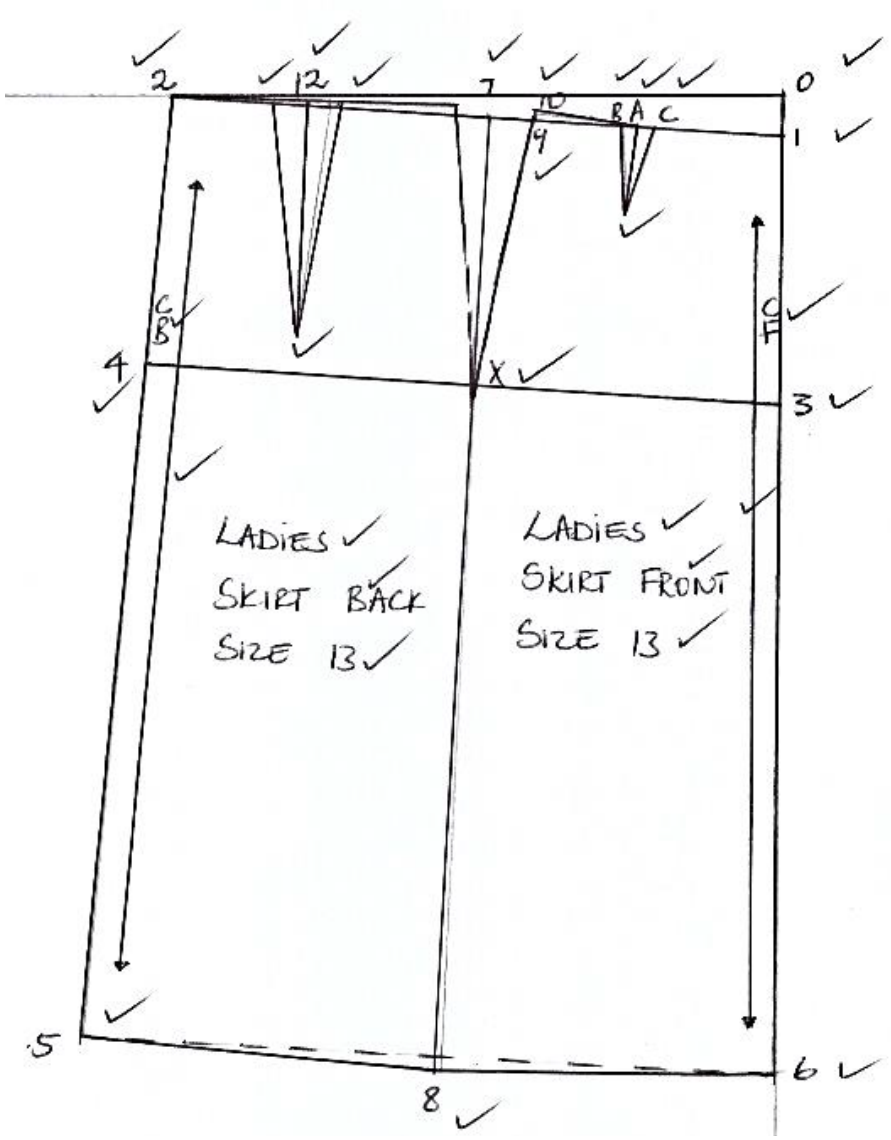

(30)

Copyright reserved

5.2 DOLMAN SLEEVE BLOCK, SIZE 13, FIFTH SCALE

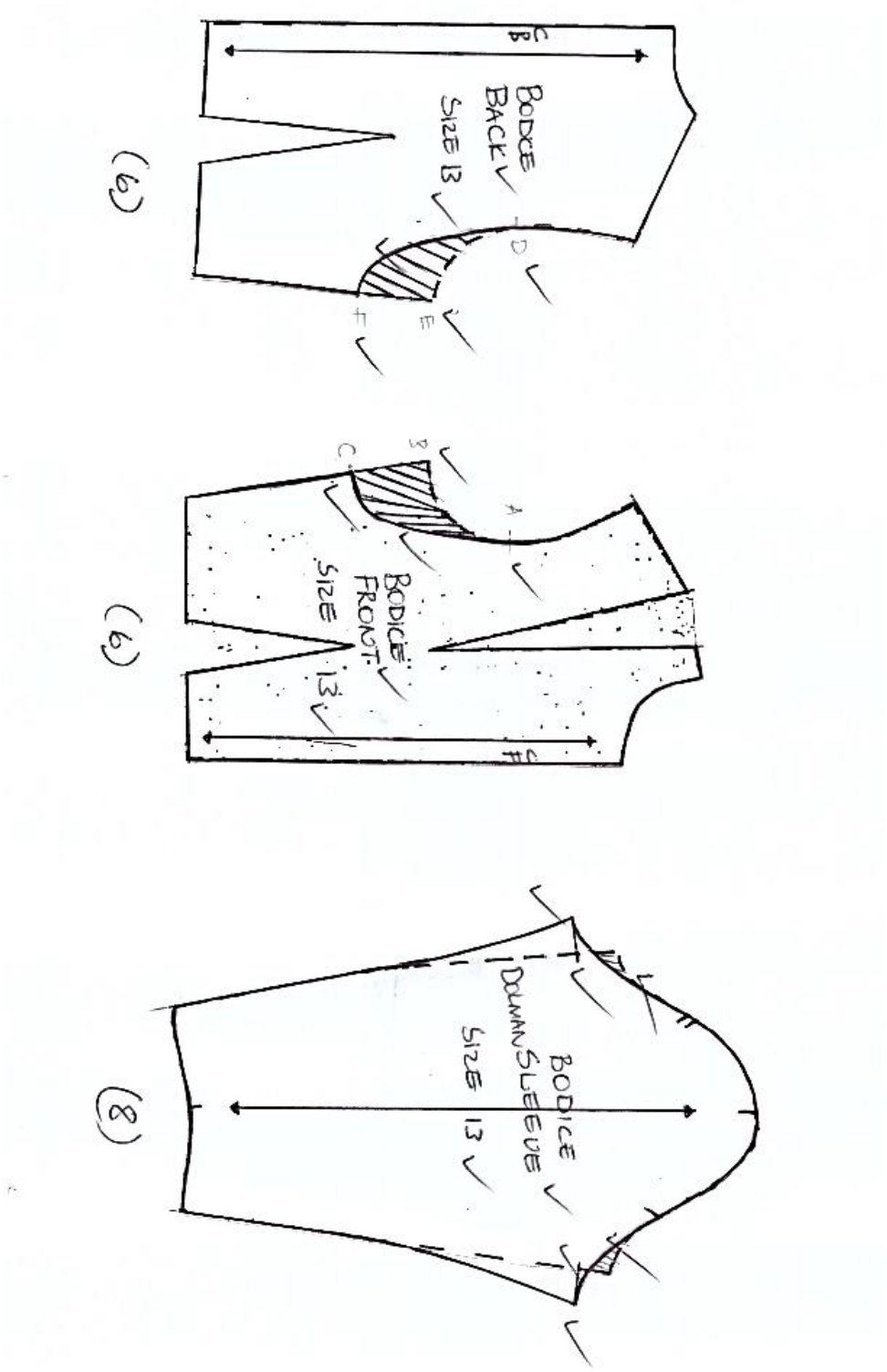

(20)
[50]

Copyright reserved

QUESTION 6

Manipulation of ladies Bermuda trousers, size 13, fifth scale.

6.1 Planning

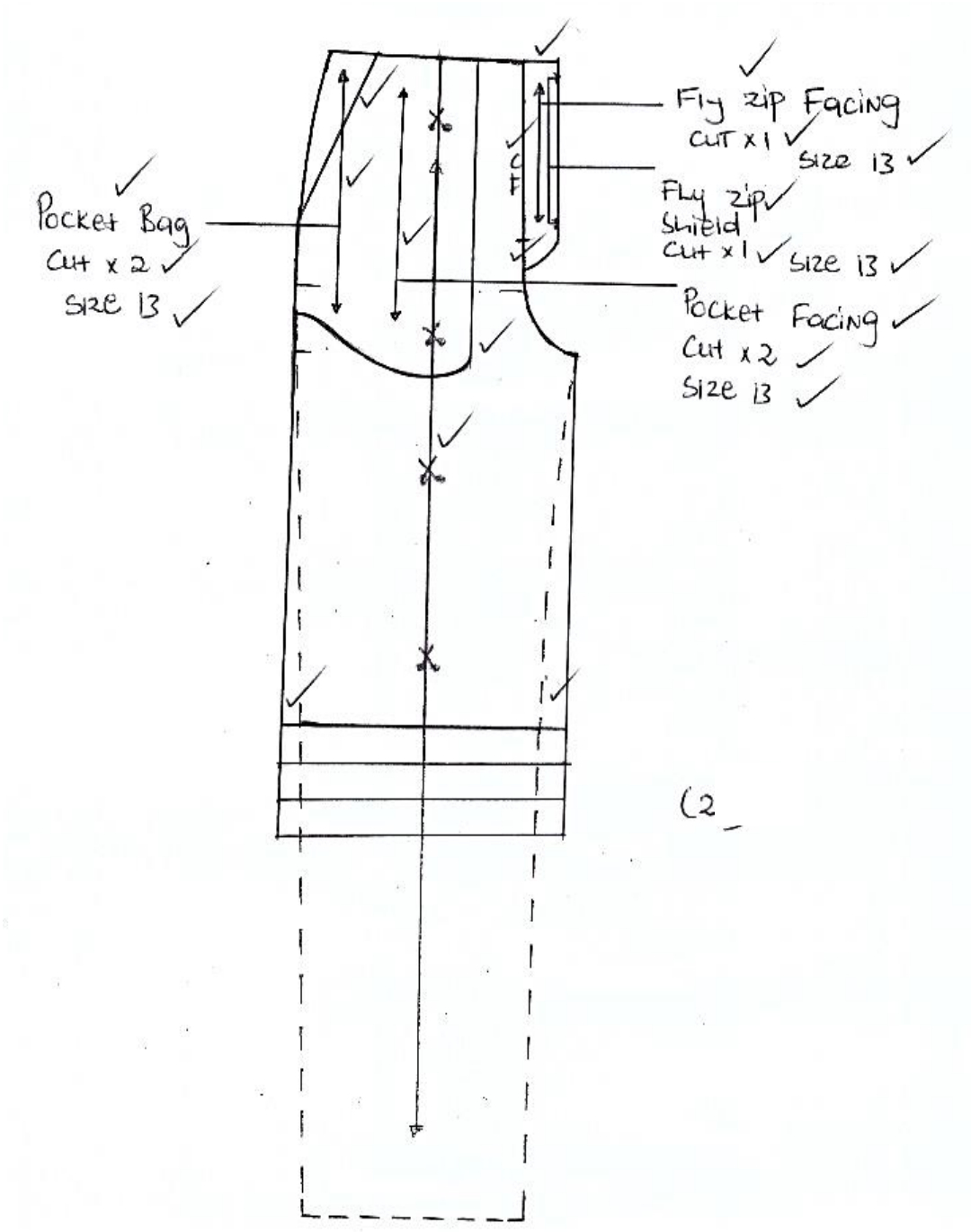

(22)

Copyright reserved

6.2 Working pattern of the pleat and turn-up (18)

6.3 Final pattern of the pocket facing (10)

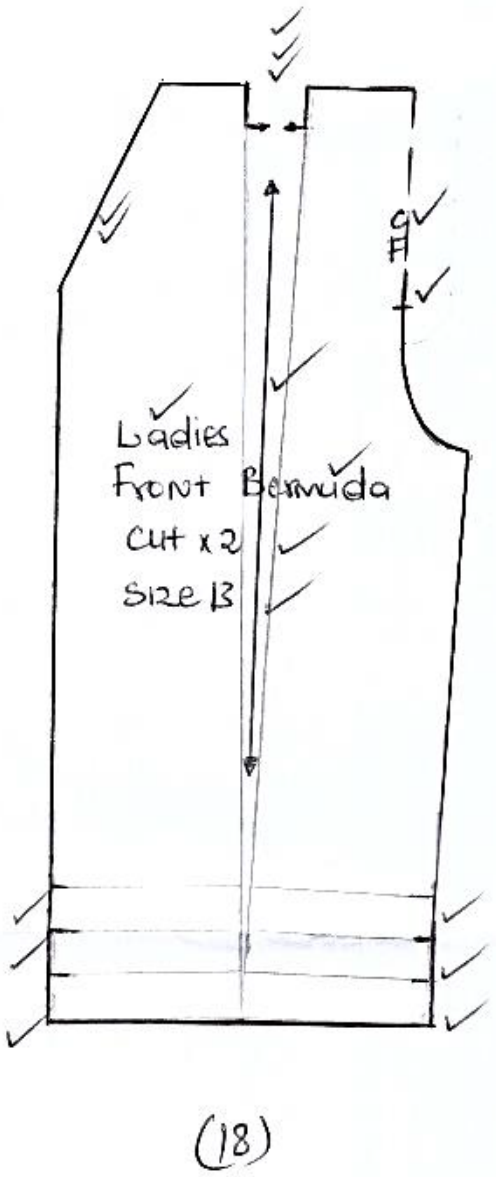

(18)

6.3

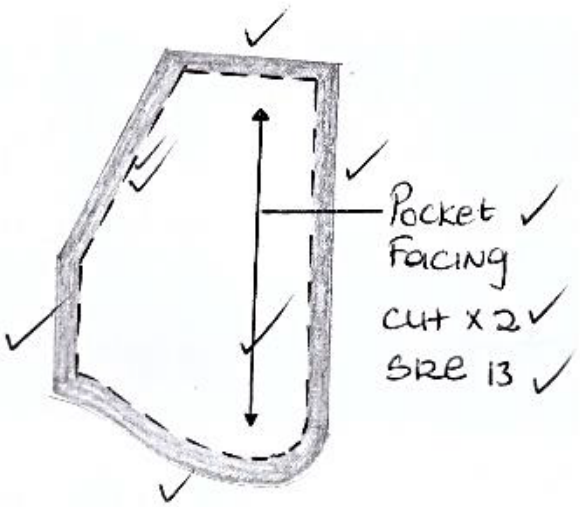

(10)

[50]

Copyright reserved

QUESTION 7

Manipulation of ladies dress, size 13, fifth scale.

7.1 Planning of the dress

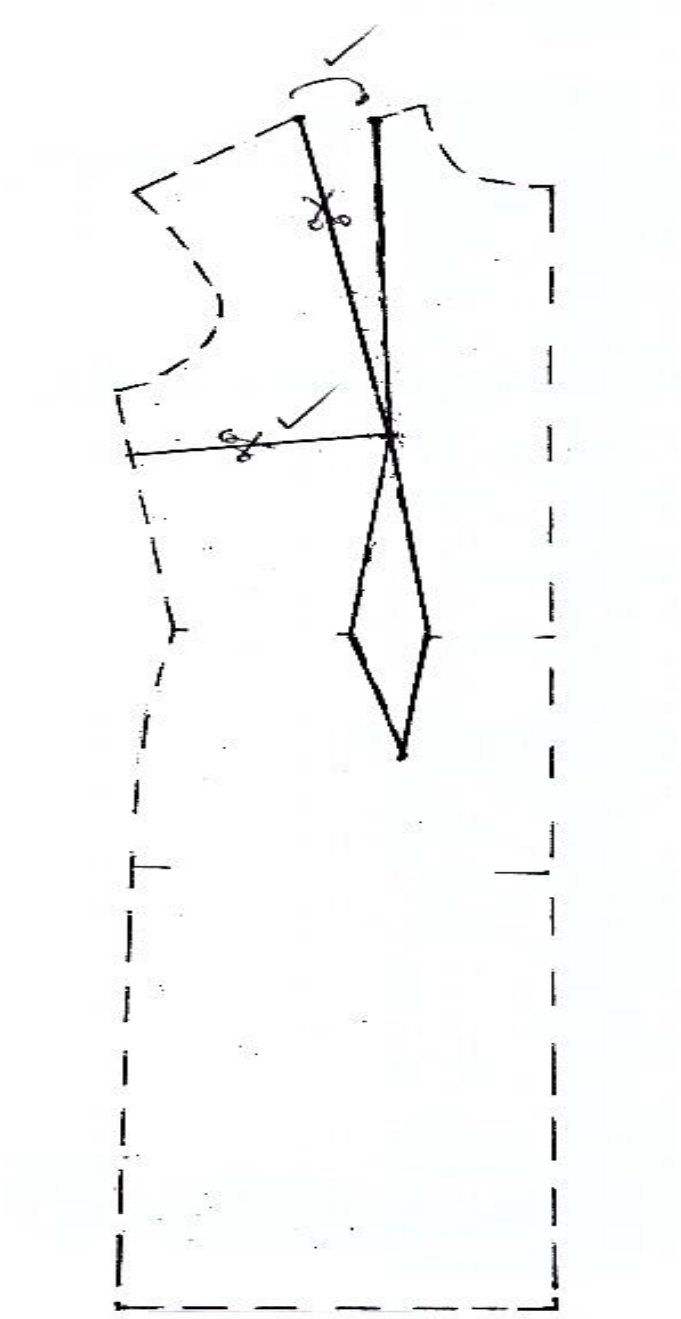

(30)

Copyright reserved

7.2 Working pattern of the dress (12)

7.3 Final pattern of the combined facing (8)

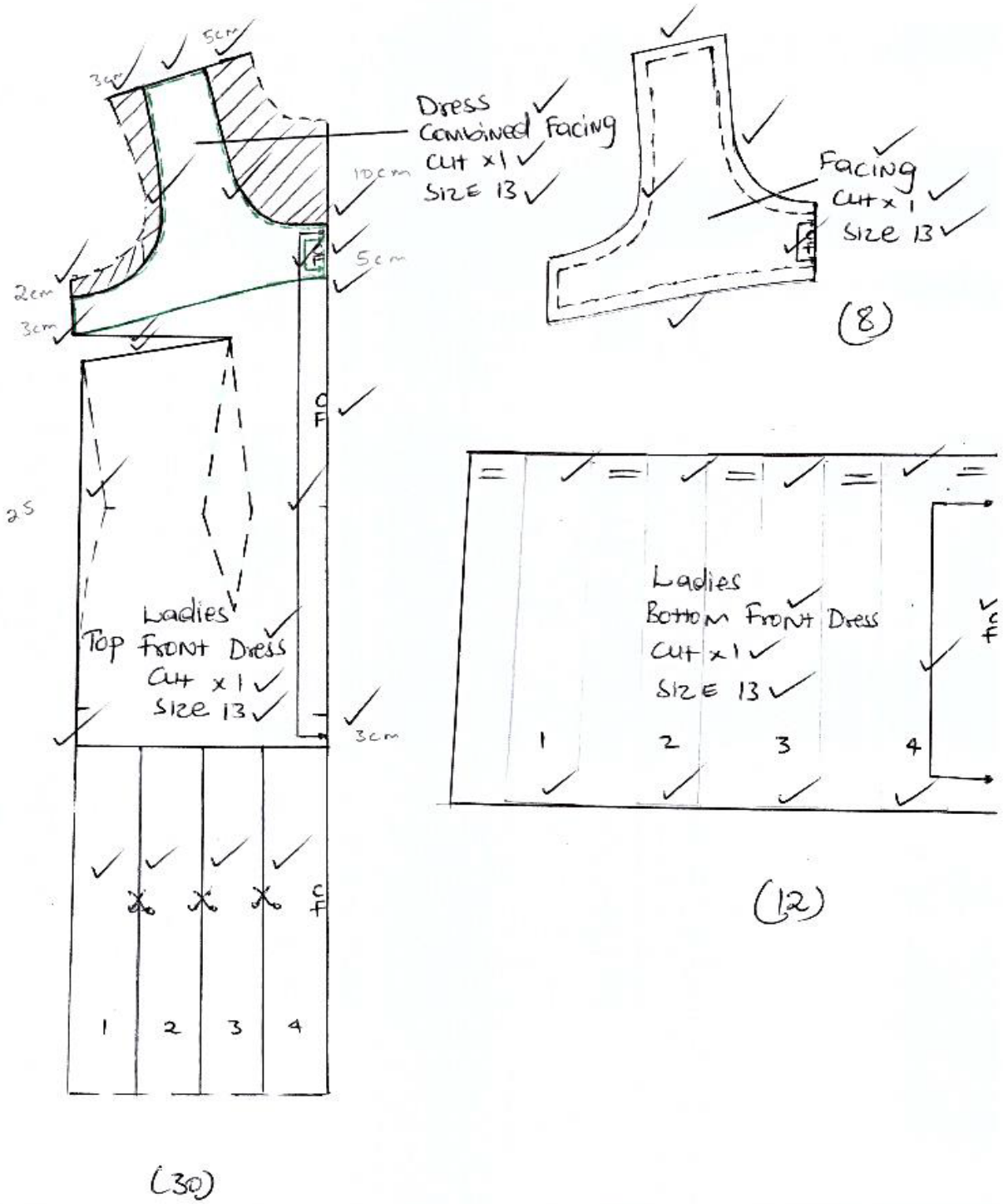

(30) (8) (12)

[50]

TOTAL SECTION B: 150
GRAND TOTAL: 200

Copyright reserved