higher education & training

Department:
Higher Education and Training
REPUBLIC OF SOUTH AFRICA

MARKING GUIDELINE

NATIONAL CERTIFICATE

PATTERN CONSTRUCTION N4

28 May 2021

This marking guideline consists of 7 pages.

Copyright reserved

SECTION A

QUESTION 1

1.1 1.1.1 Outlines for different block sections such as front and back bodice

1.1.2 Adapting and changing of basic bodice block into any desired style/Act of slashing and spreading/pivoting pattern sections to alter original shape

1.1.3 Dividing right angle (90 degrees) into two equal parts

1.1.4 Complete record of all pattern pieces within pattern set including swatches and sketches

1.1.5 Corrected, perfected pattern pieces to complete garment

(5 × 2) (10)

1.2
- Waist
- Hip
- Bust
- Around arm
- Around neck
- Around cuff

(Any 4 × 2) (8)

1.3
- Peter Pan collar
- Sailor collar

(2 × 2) (4)

1.4
- Bust
- Waist
- Across back
- Back length

(4 × 2) (8)

[30]

QUESTION 2

2.1 False
2.2 True
2.3 False
2.4 True
2.5 False
2.6 True
2.7 True
2.8 True
2.9 False
2.10 True

(10 × 1) **[10]**

Copyright reserved

QUESTION 3

3.1 I
3.2 E
3.3 K
3.4 A
3.5 B
3.6 C
3.7 J
3.8 D
3.9 F
3.10 G

(10 × 1) **[10]**

TOTAL SECTION A: 50

SECTION B

QUESTION 4

4.1 4.1.1

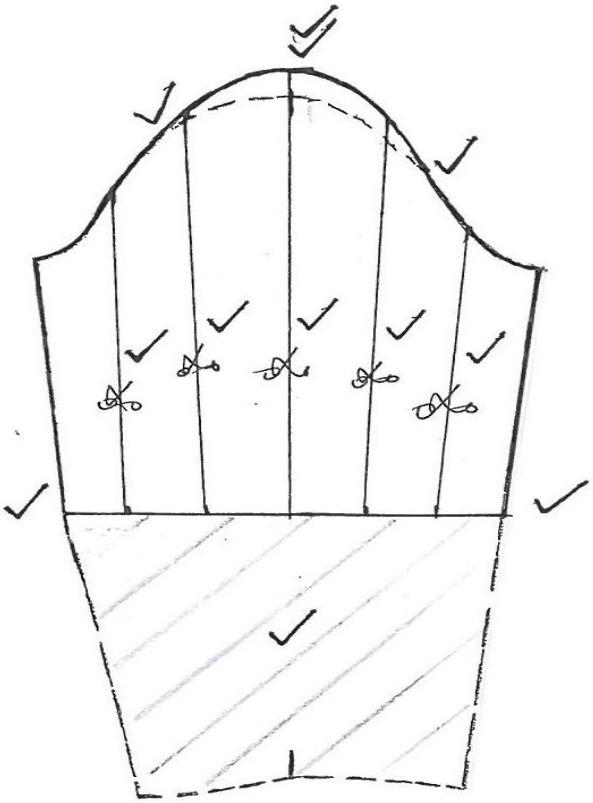

(12)

4.1.2

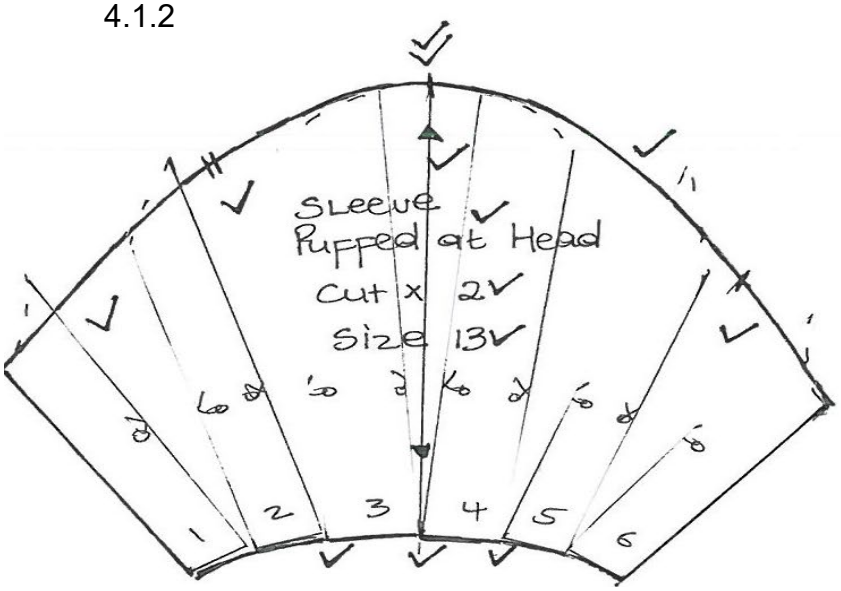

(13)

4.2

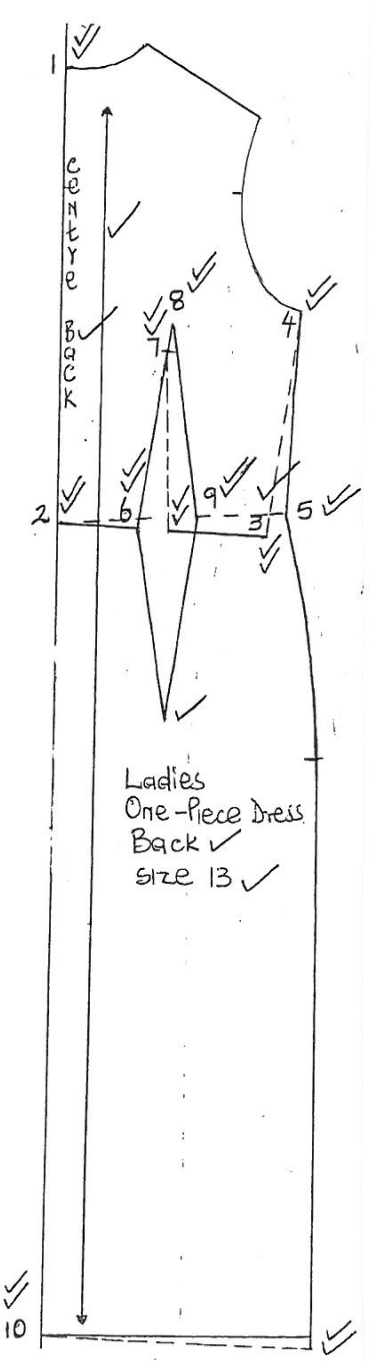

(Any 25 × 1) (25)
[50]

QUESTION 5

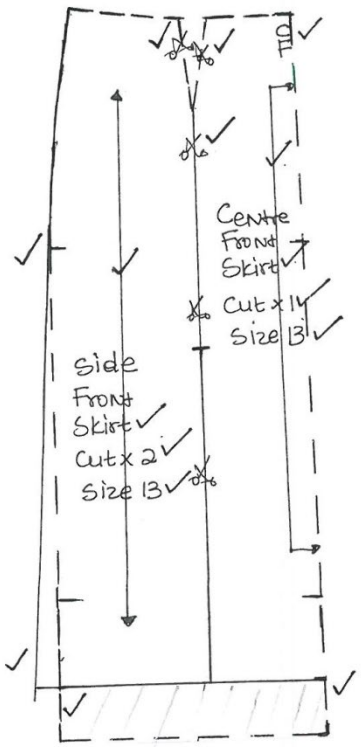

5.1.1 (16)

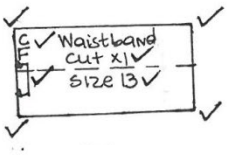

5.1.2 (8)

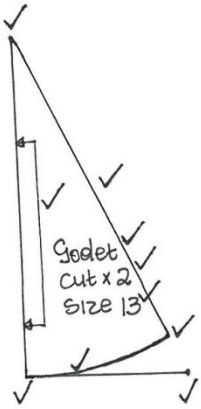

5.2…(10)
Option
open godet

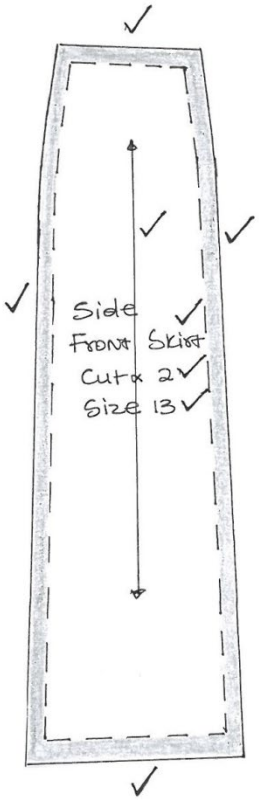

5.4 (8)

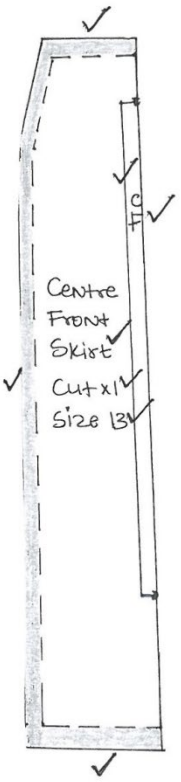

5.3 (8)

[50]

QUESTION 6

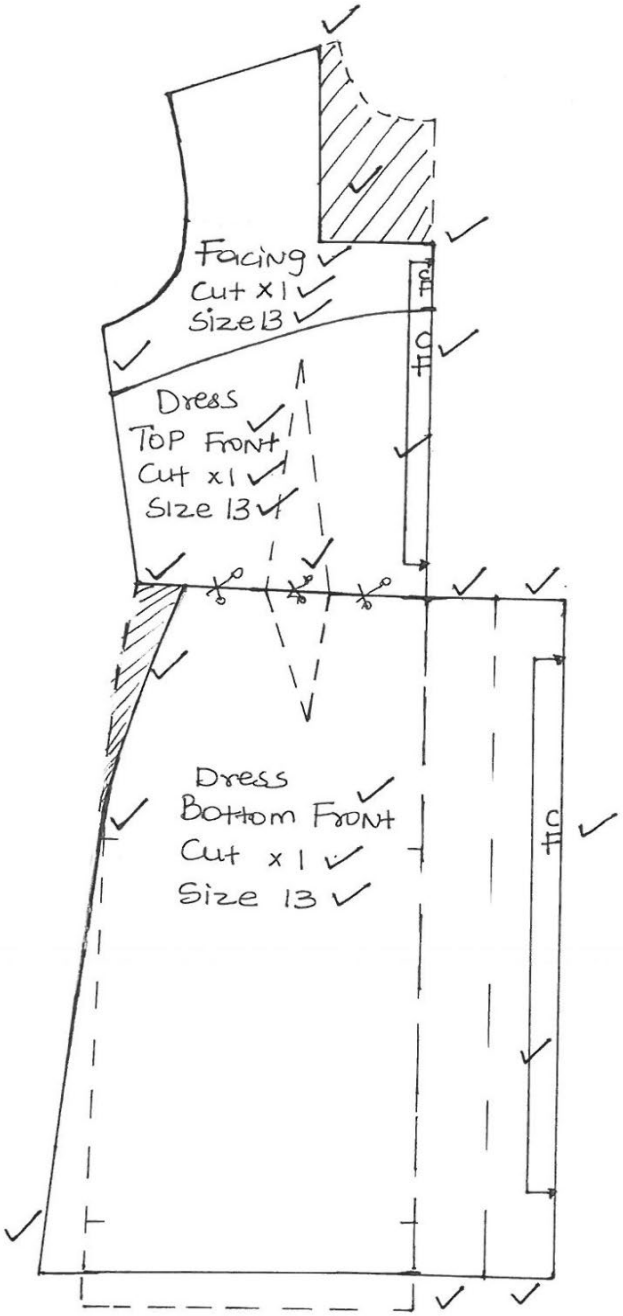

6.1 (26)

6.2 (10)

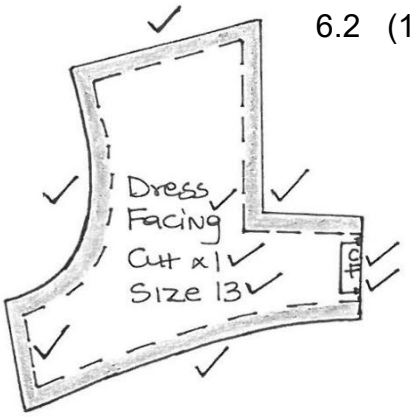

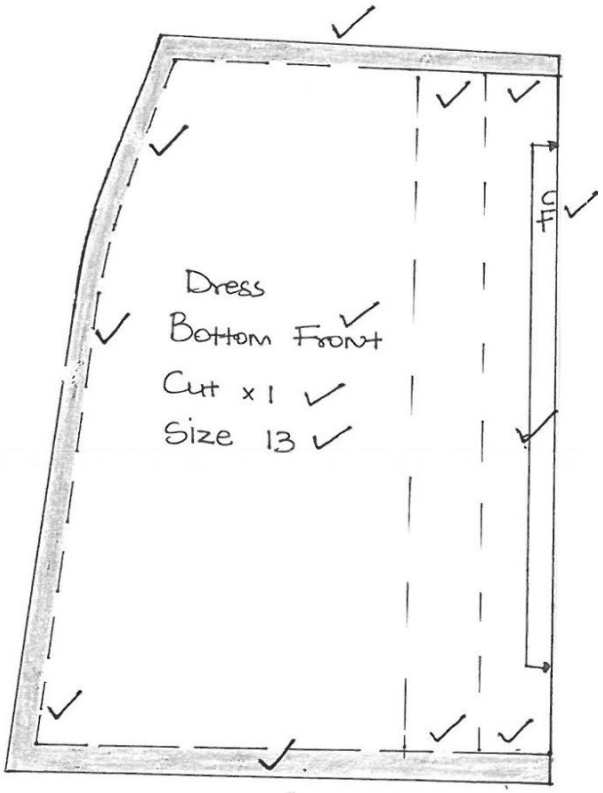

6.3 (14)

[50]

TOTAL SECTION B: 150
GRAND TOTAL: 200

Copyright reserved