higher education & training

Department:
Higher Education and Training
REPUBLIC OF SOUTH AFRICA

NATIONAL CERTIFICATE (VOCATIONAL)

MATHEMATICS
(Second paper)
NQF LEVEL 3

(10501053)

26 November 2020 (Y-paper)
13:00–16:00

Nonprogrammable scientific calculators may be used.

This question paper consists of 7 pages and a formula sheet of 2 pages.

115Q2N2026

Copyright reserved

TIME: 3 HOURS
MARKS: 100

INSTRUCTIONS AND INFORMATION

1. Answer all the questions.
2. Read all the questions carefully.
3. Number the answers according to the numbering system used in this question paper.
4. Clearly show all calculations, diagrams, graphs, etc. used in determining the answers.
5. Round off answers to THREE decimal places unless stated otherwise.
6. Diagrams are not drawn to scale.
7. Write neatly and legibly.

Copyright reserved

QUESTION 1

A group of learners wrote a standardised English test scored out of 60. The results of the test were represented in the cumulative graph shown below.

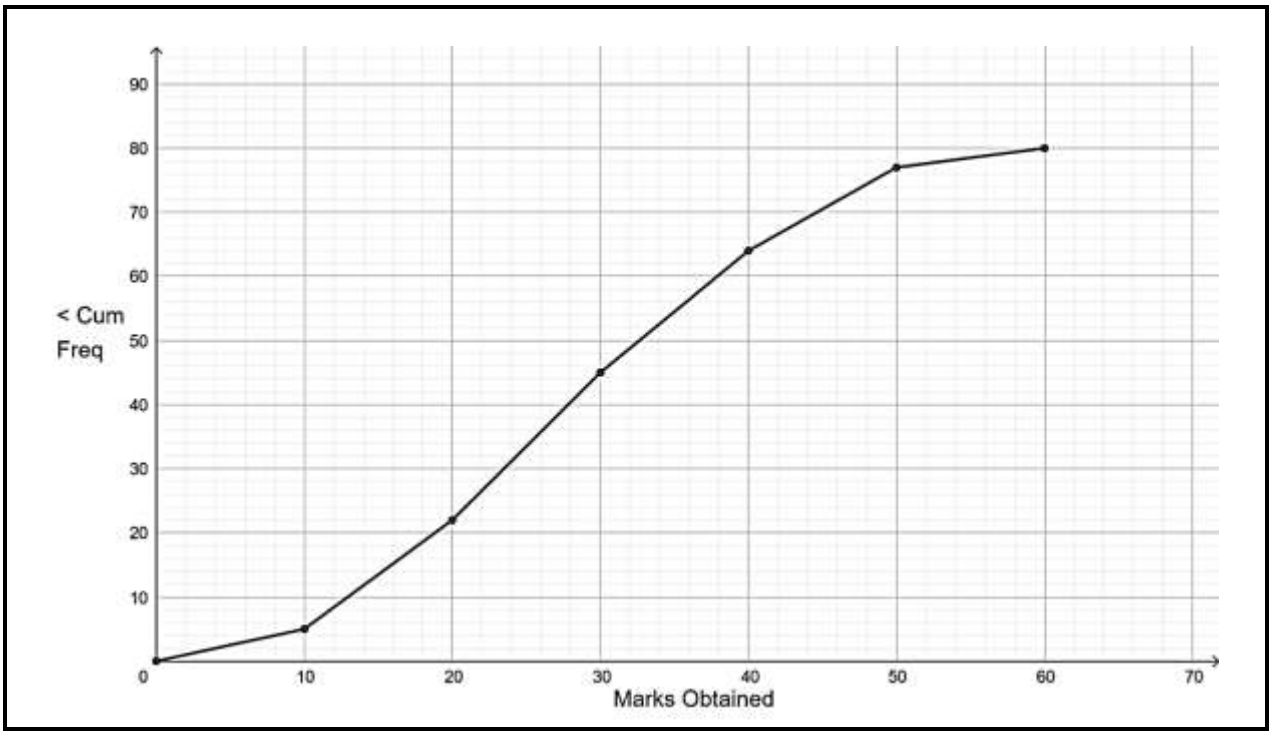

1.1 How many learners wrote the test? (1)

1.2 Use the cumulative frequency graph to complete the frequency distribution table below by writing only the answer next to the question number (1.2.1–1.2.8) in the ANSWER BOOK.

Classes (marks)	**Frequency** (f_i)	**Midpoint** (x_i)	$f_i \times x_i$	**Cumulative frequency** $<\langle$
$0 \leq x \langle 10$	5	5	25	5
$10 \leq x \langle 20$	**1.2.1**	15	**1.2.2**	22
$20 \leq x \langle 30$	23	25	575	**1.2.3**
$30 \leq x \langle 40$	**1.2.4**	35	665	**1.2.5**
$40 \leq x \langle 50$	**1.2.6**	45	585	77
$50 \leq x \langle 60$	**1.2.7**	55	165	**1.2.8**
TOTAL	**80**		$\sum f_i x_i = 2\,270$	

(8 × 1) (8)

1.3 Calculate the mean of the data set. (2)

1.4 Calculate the median of the data set using the following formula:

$$Me = l + \frac{\left(\frac{n}{2} - F\right)}{f} \times c$$

(3)

Copyright reserved

1.5 Calculate the mode of the data set using the following formula:

$$Mo = l + \frac{f_m - f_{m-1}}{2f_m - f_{m-1} - f_{m+1}} \times c$$ (3)

1.6 Use the ogive or cumulative frequency graph to estimate the five-number summary. (4)

1.7 Calculate the upper and lower fence values for the data set. (4)

1.8 Draw a scaled and labelled box-and-whisker diagram for the data set. (4)

1.9 Comment on the skewness of the data set. (1)

[30]

QUESTION 2

2.1 In the diagram below A (-9; 12), B (9; 9) and C (-3; -9) are vertices of ΔABC. N (a; 7) is a point such that BN = $5\sqrt{5}$. RS is parallel to AC and RNS passes through the origin. AMC is a straight line. $A\hat{C}B = \theta, A\hat{M}O = \alpha$ and $M\hat{P}C = 33{,}69°$.

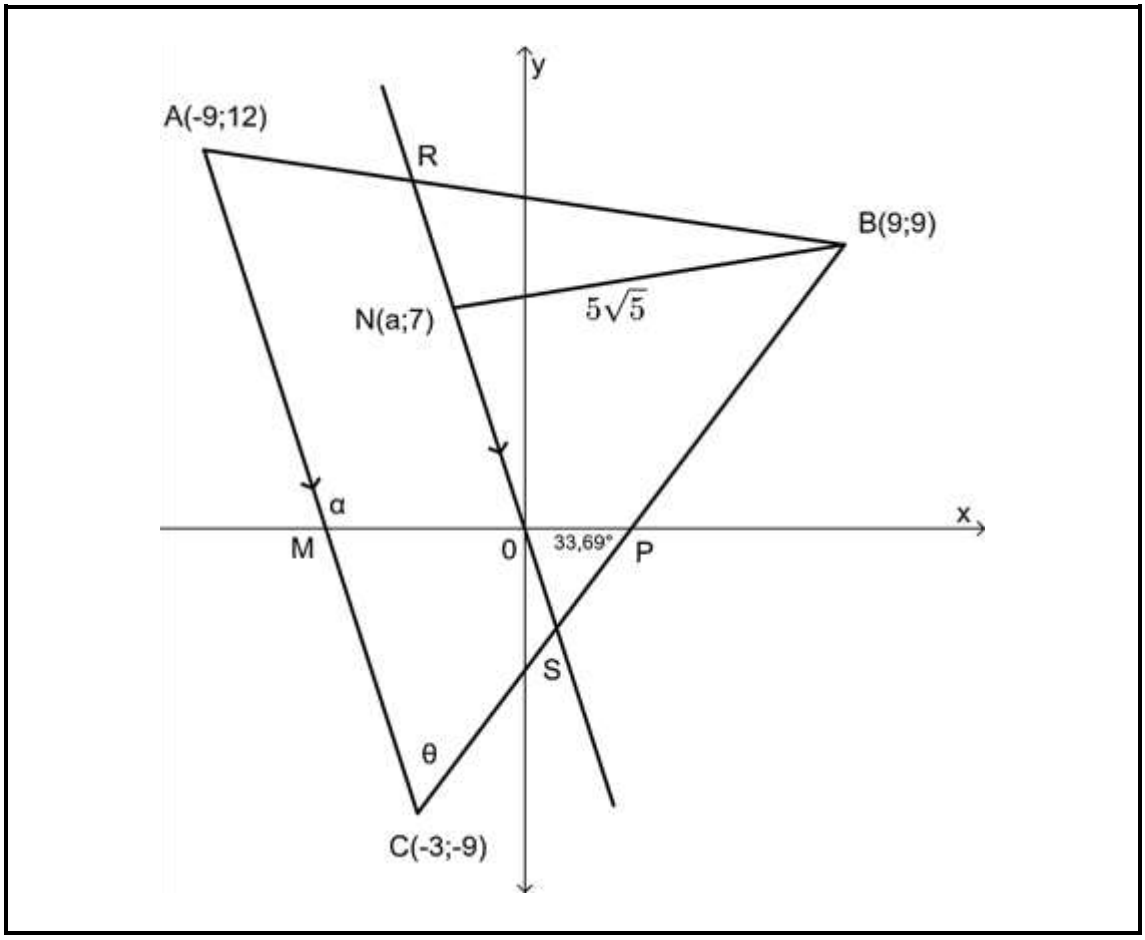

2.1.1 Calculate the gradient of line AC. (3)

2.1.2 Determine the equation of line RS in the form $y = mx + c$. (3)

2.1.3 Calculate the value of a. (4)

2.1.4 Calculate the size of θ.

HINT: Angles in a straight line add up to 180°. The sum of the angles in a triangle add up to 180°. (5)

2.2 The diagram below represents Thulani's home-made device to manufacture fishing weights. Molten lead will be poured into the mould to create the fishing weights. The device consists of a solid wooden prism with a square base having sides of 5,3 cm. The wooden prism has been machined to create a hollow space inside. The hollowed out space is in the shape of a triangular prism.

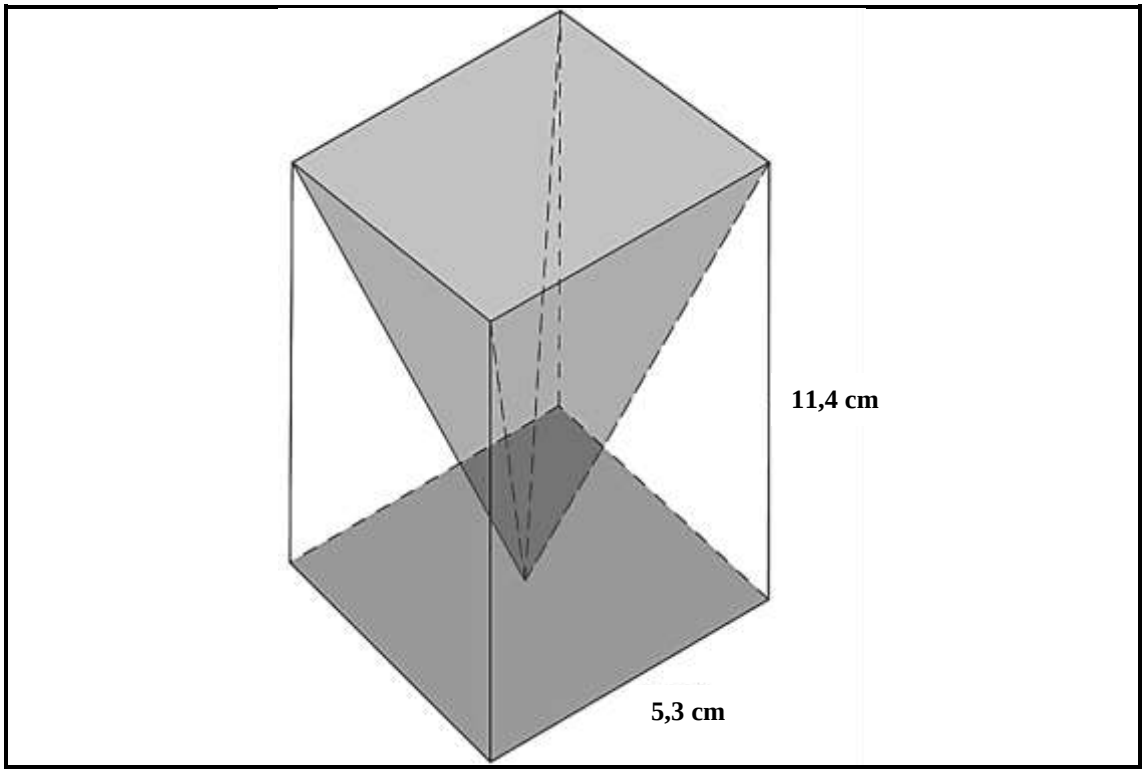

2.2.1 Determine the volume of wood Thulani removed during the machining process. (2)

2.2.2 The outer parts of the wooden prism are coated in resin to protect it against damage.

What is the surface area of the prism that needs to be coated with resin? (2)

2.2.3 Thulani has 0,25 m^3 of lead.

How many fishing weights can he manufacture? (3)

[22]

QUESTION 3

3.1 If cos23° = p, express, without using a calculator, each of the following in terms of p:

3.1.1 cos203° (3)

3.1.2 sin293° (3)

3.2 Simplify the following expression to a single trigonometric term:

$$\frac{\sin(360° - x).\tan(180° - x)}{\cos(180° + x).(\sin^2 x + \cos^2 x)} \quad (5)$$

3.3 Prove the following identity:

$$\frac{\cos x}{1 + \sin x} + \frac{1 + \sin x}{\cos x} = \frac{2}{\cos x} \quad (5)$$

3.4 The figure below represents a triangular right prism with BA = BC = 6,2 units, $A\hat{B}C = 52°$ and $F\hat{A}C = 20°$.

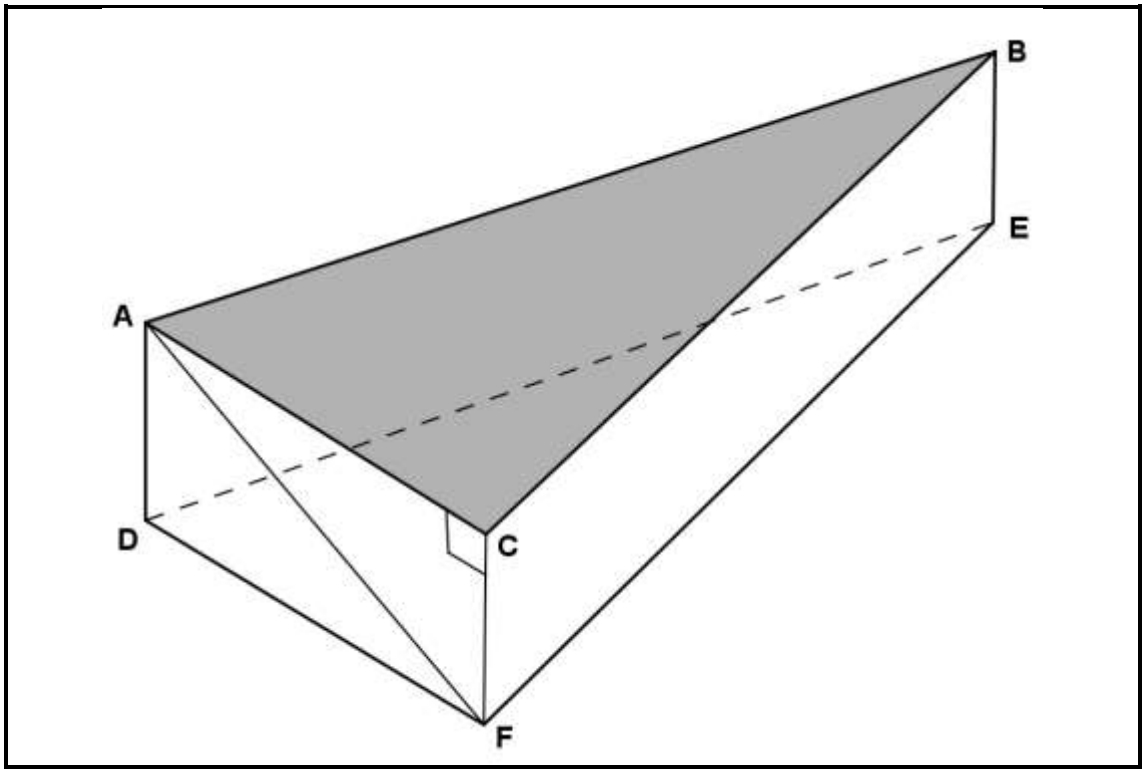

3.4.1 Determine the area of ΔABC. (3)

3.4.2 Calculate the length of AC. (3)

3.4.3 Determine the height FC of the prism. (3)

3.4.4 Determine the volume of the prism. (3)

[28]

Copyright reserved

QUESTION 4

4.1 David receives R1 500 as a gift. He invests the money in a savings account earning interest at 15% per annum compounded semi-annually.

4.1.1 How much does David have in the savings account at the end of five years? (3)

4.1.2 Miller also receives R1 500 but he invests the money in an account which earns interest quarterly.

If David and Miller have the same amount of money at the end of five years, what is the annual interest rate of Miller's earning? (4)

4.2 Exactly eight and half years ago, Bongi invested R30 000 in an account earning 6,6% per annum compounded monthly.

4.2.1 How much will he receive if he withdraws all his money today? (3)

4.2.2 Bongi withdrew R10 000 three years after making the initial deposit and reinvested R7 500 five and a half years after making the initial deposit.

Draw a time line showing Bongi's investment. (4)

4.2.3 Calculate the difference between the final amount Bongi will receive after eight and a half years and the amount he would have received had there not been any transactions on the account after the initial deposit. (6)

[20]

TOTAL: 100

Copyright reserved

FORMULA SHEET

1. Slant surface area of a pyramid = $\frac{1}{2}a\,l\,n$ **OR** $\frac{1}{2}l\,h_s\,n$ where n = number of sides
2. Surface area of triangular pyramid = $\frac{1}{2}bh+\frac{1}{2}pl$ where p = perimeter of the base
3. Surface area of a pyramid with an equilateral triangle as base = $\frac{\sqrt{3}}{4}s^2+\frac{1}{2}pl$
4. Surface area of an equilateral triangular pyramid = $4\times\frac{\sqrt{3}}{4}s^2$
5. Surface area of square pyramid = $b^2+\frac{1}{2}pl$
6. Surface area of a regular hexagonal pyramid = $\frac{3\sqrt{3}}{2}b^2+\frac{1}{2}pl$
7. Volume of a pyramid = $\frac{1}{3}$(area of base) $\times\perp$ height
8. Volume of a triangular prism = $=\frac{1}{2}bhl$
9. $s=\frac{1}{2}(a+b+c)$ where a, b, c are the sides of the triangle
10. $A=\sqrt{s(s-a)(s-b)(s-c)}$
11. Circumference of circle = $2\pi r$
12. Area of curved surface of a cone = $\pi r\,l$ **OR** $\pi r\,h_s$
13. Slant height of a cone = $l=\sqrt{h^2+r^2}$ **OR** $h_s=\sqrt{\perp h^2+r^2}$
14. Volume of cone = $V_{cone}=\frac{1}{3}\pi r^2\times_{\perp} h$
15. Area of a sphere = $A=4\pi r^2$
16. Volume of a sphere = $V=\frac{4}{3}\pi r^3$
17. $m=\frac{\Delta y}{\Delta x}=\frac{y_2-y_1}{x_2-x_1}$
18. $(x_m\,;y_m)=\left(\frac{x_1+x_2}{2}\,;\frac{y_1+y_2}{2}\right)$
19. $\theta=\tan^{-1}m$
20. Distance = $\sqrt{(x_2-x_1)^2+(y_2-y_1)^2}$
21. $\frac{\sin\theta}{\cos\theta}=\tan\theta$
22. $\sin^2\theta+\cos^2\theta=1$
23. $\frac{\sin\hat{A}}{a}=\frac{\sin\hat{B}}{b}=\frac{\sin\hat{C}}{c}$

Copyright reserved

24. $a^2 = b^2 + c^2 - 2bc \cos\hat{A}$

25. $A = \frac{1}{2}ab \sin\hat{C}$

26. $\bar{x} = \frac{\sum_{i=1}^{n} x_i}{n}$

27. $\bar{x} = \frac{\sum f_i x_i}{n}$

28. $Q_{j\ position} = \frac{j}{4}(n+1)$

29. $Q_i = Q_3 - Q_1$

30. Fence = $Q_3 + 1{,}5(Q_i)$

31. Fence = $Q_1 - 1{,}5(Q_i)$

32. $Me = l + \frac{\left(\frac{n}{2} - F\right)}{f} \times c$

33. $Mo = l + \frac{f_m - f_{m-1}}{2f_m - f_{m-1} - f_{m+1}} \times c$

34. $I = A_0 \times \frac{r}{100} \times t$ **OR** $I = \frac{P\,r\,t}{100}$ **OR** $A_t = P(1+in)$

35. $A_t = A_0\left(1 + \frac{r}{100 \times m}\right)^{t \times m}$ **OR** $A_t = P(1+i)^n$

36. $A_t = A_o(1 - \frac{r}{100})^t$ **OR** $A_t = P(1-i)^n$

Copyright reserved