higher education & training

Department:
Higher Education and Training
REPUBLIC OF SOUTH AFRICA

# MARKING GUIDELINE

## NATIONAL CERTIFICATE (VOCATIONAL)

## WELDING
## NQF LEVEL 4

## XX February 2020

**This marking guideline consists of 5 pages.**

Copyright reserved

## QUESTION 1

1.1 1.1.1 A
1.1.2 B
1.1.3 B
1.1.4 A
1.1.5 D

(5 × 1) (5)

1.2 Stainless steel that is not protected from the atmosphere during welding will form a thick oxide layer on its surface with a thinner chromium layer underneath which will not protect the metal.✓ The sparks during grinding of carbon steel will lead to material on the surface weld which could cause rust and contaminations in the weld.✓ Care should be taken not to include alloying elements such as sulphur and phosphorus as they have a high thermal expansion coefficient and can cause cracking.✓ Thermal stress is also associated with stainless steel.✓ To avoid thermal stress a low welding current is required.✓ (Any relevant 5 × 1) (5)

1.3

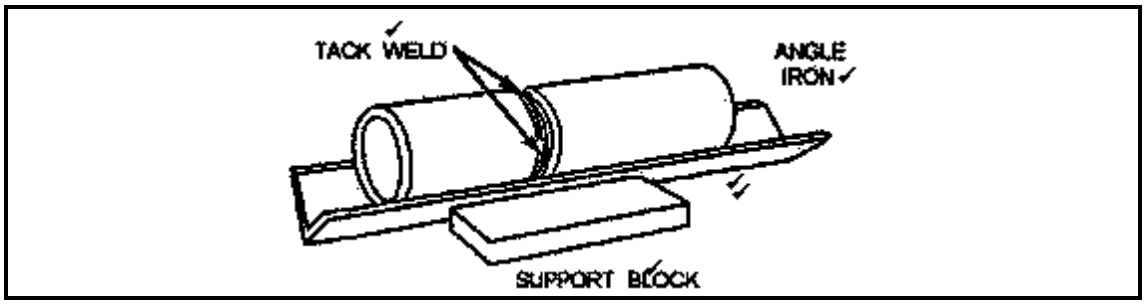


(5)

1.4 The ends of the pipes should be as parallel as possible.✓ Use a grinder to remove high and uneven spots.✓ Remove grease and paint from the inside and outside of the welding area by burning it off with a cutting torch.✓ Ensure that the groove angle is sufficient.✓ The welded area must be free from moisture.✓ (Any relevant 5 × 1) (5)

**[20]**

## QUESTION 2

2.1 2.1.1 A chipping hammer is used to remove slag/spatter from the weld.

2.1.2 Files are used to remove sharp edges.

2.1.3 G-clamps are used to hold metal workpieces together during welding.

2.1.4 A wire brush is used to clean welds.

2.1.5 An engineering square is used to check if workpieces are square and in the correct position. (Any relevant 5 × 1) (5)

Copyright reserved 

2.2 A – Weld-metal crack
B – Toe crack
C – Heat-affected zone crack
D – Weld-interface crack
E – Heat-affected zone crack/Under-bead crack

(5 × 1) (5)

2.3 2.3.1 welding machine
2.3.2 alternating current
2.3.3 direct current
2.3.4 power
2.3.5 current
2.3.6 voltage
2.3.7 workpiece
2.3.8 diameter

(8 × 1) (8)

2.4
- Check the thickness of the pipe as it determines the size of the electrode to be used.
- Ensure that the pipe does not contain flammable substances.

(Any relevant 2 × 1) (2)
**[20]**

**QUESTION 3**

3.1 The gas tungsten arc welding (GTAW) process produces heat, light, fumes and sparks.✓ The arc from the weld can be dangerous for people in the area.✓ Welding should be done in an enclosed area or partitioned by using portable stands.✓ The area should be free from flammable substances and materials such as gases which can cause fires from welding sparks.✓ Metal shavings also cause fires and therefore the area must be clean.✓ Ensure that the area is well ventilated and that firefighting equipment is always nearby.✓ (Any relevant 6 × 1) (6)

3.2 The welding area is in an upright position.✓ The weld is usually started at the bottom of the joint with the filler rod added from above.✓ The travelling direction is upwards.✓ With this position a previous dab of filler metal solidifies✓ and becomes support for the next filler metal dab to rest on.✓

(Any relevant 5 × 1) (5)

3.3

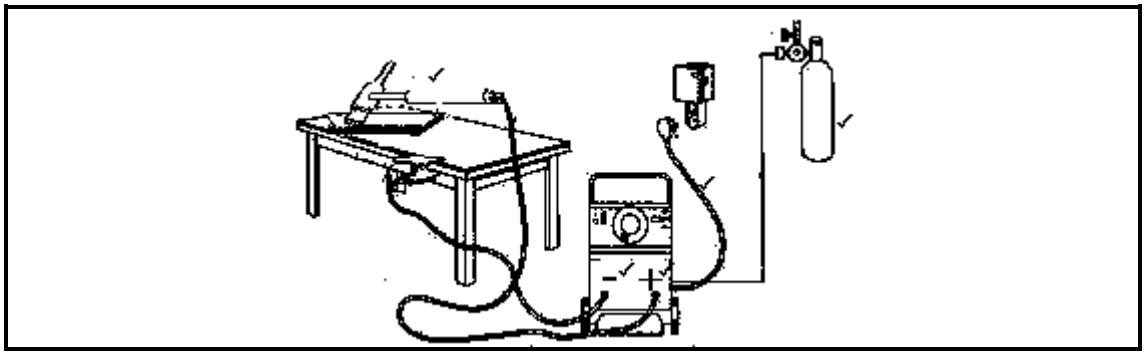

(5)

3.4 A – Cylinder valve
B – Shut-off valve
C – Pressure regulator
D – Pressure gauge

(4 × 1) (4)
**[20]**

**QUESTION 4**

4.1
- Ensure that the cylinders are chained.
- Do not store cylinders in areas with excessive heat.
- Store cylinders in an upright position.
- Store empty cylinders separately.
- Do not store cylinders in areas of excessive vibration.
- Do not store cylinders in areas exposed to electrical circuits.
- Store cylinders in a dry, ventilated area. (Any 5 × 1) (5)

4.2

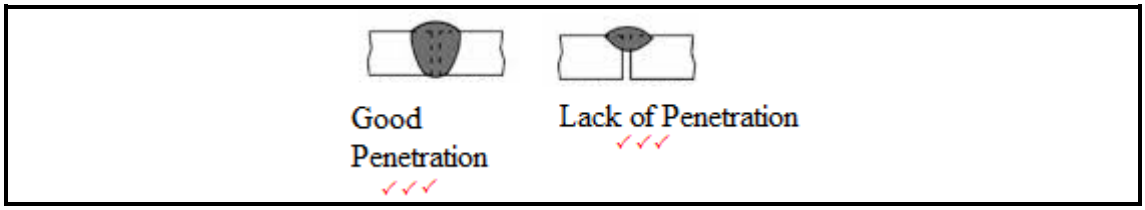


(2 × 3) (6)

4.3
- Pure
- Ceriated
- Lanthanated
- Zirconiated
- Thoriated (5)

4.4 4.4.1 The horizontal weld position is the axis of the weld in the horizontal plane that is commonly used for fillet or groove welds. (2)

4.4.2 The vertical weld position is the weld area in an upright position where the weld starts from the bottom of the workpiece and then moves upwards on the joint. (2)
**[20]**

**QUESTION 5**

5.1 A – Shielding gas
B – Shroud or gas nozzle
C – Electrode wire
D – Metal transfer or metal droplets
E – Workpiece or base metal

(5 × 1) (5)

5.2 Remove the empty reel by loosening the screw.✓ Insert the new reel and tighten the screw to secure the wire reel.✓ Insert the wire through the tube and onto the groove of the rollers.✓ Ensure that the wire on the reel does not get slack. Lock the rollers on the wire feeder so that the electrode wire is secured in the groove.✓ Ensure that the cables are straight and not twisted so that the wire can run easily. Press the trigger on the gun until you notice the wire protruding out in front of the nozzle of the gun.✓ (Any relevant 5 × 1) (5)

5.3
- Poor penetration
- Excessive spatter
- Overheating
- Difficulty in controlling the arc
- Irregular bead shape (Any relevant 5 × 1) (5)

5.4 Switch off the machine at the power supply and unplug the power cable.✓ Turn all dials and knobs to the off position.✓ Turn off the shielding-gas supply by closing the valve on the gas cylinder. Roll up the cables and hoses.✓ Store the cylinder away from flammable material.✓ All tools must be stored in a toolbox/cardboard.✓ (Any relevant 5 × 1) (5)

**[20]**

**TOTAL: 100**

Copyright reserved