higher education & training

Department:
Higher Education and Training
REPUBLIC OF SOUTH AFRICA

NATIONAL CERTIFICATE (VOCATIONAL)

WELDING
NQF LEVEL 3

(6031033)

21 November 2018 (X-Paper)
09:00–12:00

This question paper consists of 6 pages.

NCV

TIME: 3 HOURS
MARKS: 100

INSTRUCTIONS AND INFORMATION

1. Answer ALL the questions.
2. Read ALL the questions carefully.
3. Number the answers according to the numbering system used in this question paper.
4. Start each question a NEW page.
5. Write neatly and legibly.

NC(V)

Copyright reserved

QUESTION 1

Make neat labelled sketches of the following welding joints:

1.1 Butt joint

1.2 Fillet joint or T-joint

1.3 Edge joint

1.4 Angle joint

(4 × 3) **[12]**

QUESTION 2

2.1 FIGURE 1 shows the set-up of equipment used for shielded metal arc welding (SMAW).

Label items (A–F) in the ANSWER BOOK.

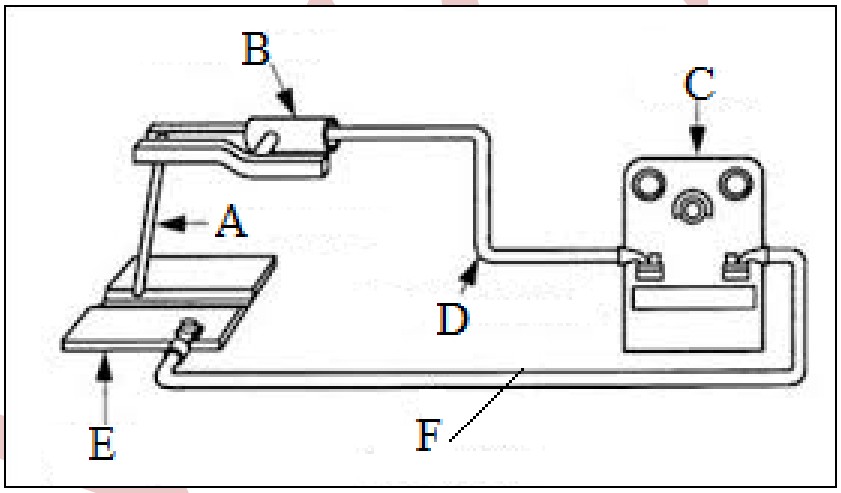

FIGURE 1 (6)

2.2 What do the following abbreviations stand for:

2.2.1 UV

2.2.2 DC

2.2.3 DCEN

(3 × 2) (6)

2.3 List FOUR imperfections that may occur during welding. (4)

2.4 Explain the difference between run out length and run out ratio. (4)

Copyright reserved

2.5 Make neat sketches of the welding symbols for the following labels:

- Weld all round
- Included angle (45°)
- Length of weld (150)
- Pitch of weld (200)
- Size of weld (4)

(5)
[25]

QUESTION 3

3.1 List SIX consumables used for gas welding. (6)

3.2 FIGURE 2 shows a gas cutting torch.

Name items (A–F) in the ANSWER BOOK.

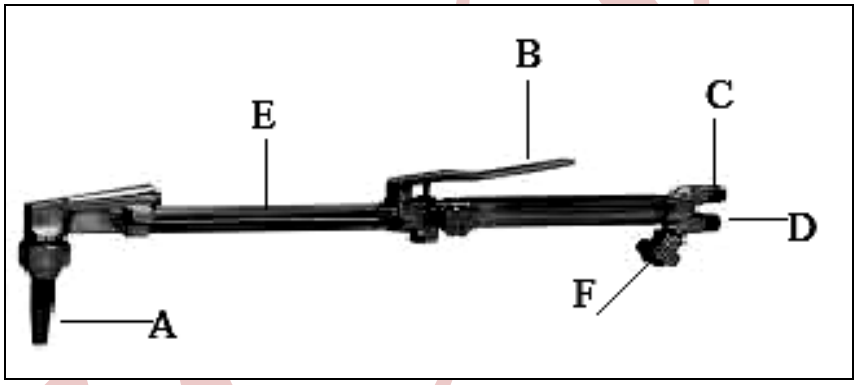

FIGURE 2 (6)

3.3 State the function of the following components:

3.3.1 Check valve

3.3.2 Flashback arrestor

3.3.3 Regulators

(3 × 2) (6)

3.4 Name the TWO types of oxy-acetylene welding torches. (2)
[20]

QUESTION 4

4.1 FIGURE 3 shows the gas tungsten arc welding process.

Label items (A–F) in the ANSWER BOOK.

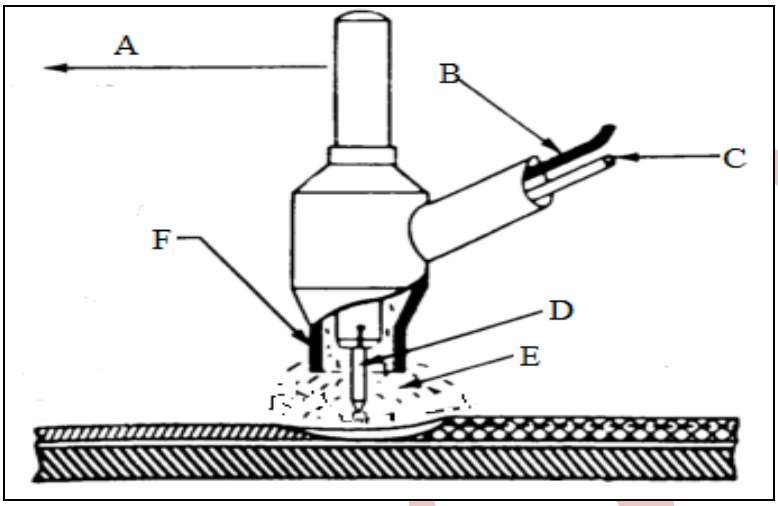

FIGURE 3 (6)

4.2 Indicate whether the following statements are TRUE or FALSE. Write only 'true' or 'false' next to the question number (4.2.1–4.2.8) in the ANSWER BOOK.

4.2.1 Gas cylinders must be regularly examined for any defects.

4.2.2 It is unnecessary to post signs indicating that smoking is not allowed.

4.2.3 Empty cylinders need not be marked or properly closed as they are no longer being used.

4.2.4 Green is used to identify acetylene hoses.

4.2.5 The grounding of the welding machine frame and safety ground connections of portable machines must be checked from time to time.

4.2.6 You may loop the welding electrode cable around your body if it becomes a hindrance in your work.

4.2.7 When welding is done on metal walls, precautions must be taken to protect combustibles on the other side.

4.2.8 Eye protection, welding helmets and goggles must adhere to appropriate standards.

(8 × 1) (8)

4.3 List SIX advantages of the gas tungsten arc welding process. (6)

4.4 List FIVE parameters to be considered for gas tungsten arc welding. (5)
[25]

QUESTION 5

5.1 List SIX safety precautions that need to be adhered to while welding. (6)

5.2 List SIX components of a metal inert gas (MIG) welding set-up. (6)

5.3 Inclusion is a defect found in welding.

Define *inclusion*. (3)

5.4 State THREE types of non-destructive methods used to determine the quality of a weld. (3)
[18]

TOTAL: 100

NCV

Copyright reserved