higher education & training

Department:
Higher Education and Training
REPUBLIC OF SOUTH AFRICA

NATIONAL CERTIFICATE (VOCATIONAL)

WELDING
NQF LEVEL 3

(6031033)

9 March 2018 (X-Paper)
09:00–12:00

This question paper consists of 6 pages.

NCV

TIME: 3 HOURS
MARKS: 100

INSTRUCTIONS AND INFORMATION

1. Answer ALL the questions.
2. Read ALL the questions carefully.
3. Number the answers according to the numbering system used in this question paper.
4. Write neatly and legibly.

NCNW

QUESTION 1

Explain the meaning of the following terms.

1.1 Hot rolling

1.2 Roll forming

1.3 Forging

1.4 Press forging

1.5 Upset forging

(5 × 2) **[10]**

QUESTION 2

2.1 FIGURE 1 (below) shows a Shielded Metal Arc Welding process. Label the items (2.1.1–2.1.9) in the ANSWER BOOK.

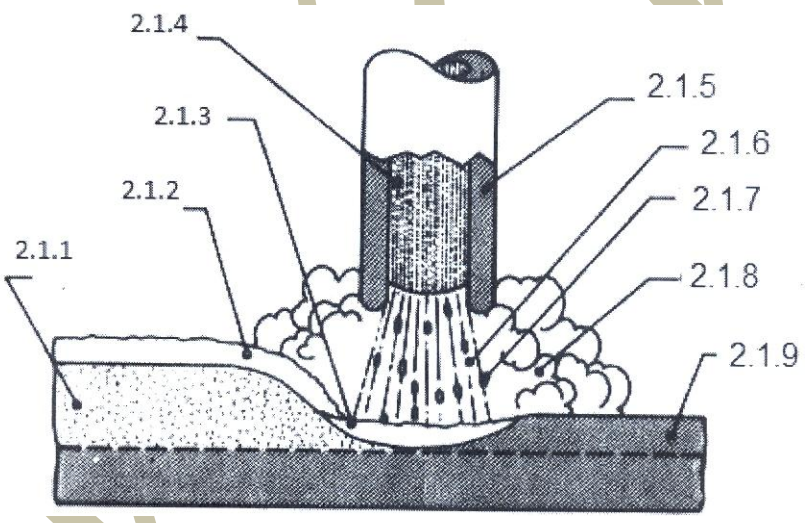

FIGURE 1 (9)

2.2 Explain the meaning of the numbering system (E 6013) printed on electrode. (4)

2.3 List EIGHT hazards associated with SMAW. (8)

2.4 List FOUR visual inspections done during welding (4)

[25]

QUESTION 3

3.1 Explain the function of the check valve on a gas welding torch. (3)

3.2 State 12 basic steps in the oxy- acetylene gas welding process. (12)

3.3 List FIVE types of welding joints used during gas welding. (5)
[20]

QUESTION 4

4.1 Choose an item from COLUMN B to match a description in COLUMN A. Write only the letter (A–J) next to the question number (4.1.1–4.1.10.) in the ANSWER BOOK.

COLUMN A		COLUMN B	
4.1.1	Shielded gas	A	electrical conductor used to conduct current during welding
4.1.2	Filler metal	B	the by-product of the welding process
4.1.3	Electrode	C	the deposition of filler metal from a single welding pass
4.1.4	Weld pool	D	a flow of electric charge that moves in one direction
4.1.5	Weld bead	E	when electrons flow from a negative pole to a positive pole
4.1.6	Base metal	F	an inert gas used during welding
4.1.7	Slag	G	the current that flows through a circuit during the welding process
4.1.8	Polarity	H	area where base metal reached melting point and ready to be mixed with filler rod
4.1.9	Direct current	I	metal that is added during welding a joint
4.1.10	Welding current	J	one or two metals welded together to form a joint

(10 × 1) (10)

4.2 Indicate whether the following statements are TRUE or FALSE. Choose the answer and write 'true' or 'false' next to the question number (4.2.1–4.2.10) In the ANSWER BOOK.

4.2.1 The welder must always wear dry insulating gloves to prevent electric shock.

4.2.2 Welding in confined spaces is acceptable as long as u have a dust mask on.

4.2.3 Arc rays from the welding process produce powerful visible and invisible rays that can burn the eyes and skin.

4.2.4 Rolling a gas cylinder from one place to another is allowed if you are alone and there is no one to help you.

4.2.5 Repairs to your welding machine must only be done by a competent person.

4.2.6 When working in a noisy area you are allowed to use your head phones and listen to music to drown out the noise.

4.2.7 When welding near flammable material it is very important to have a fire extinguisher nearby.

4.2.8 During the welding process the most important part of your body to be covered is your eyes.

4.2.9 Pre-cleaning of the metal to be welded prevents contamination during welding.

4.2.10 If there is a little slag or scale on a weld it can be ignored and you can weld over it and cover it up.

(10 × 1) (10)

4.3 List FIVE personal protective equipment a welder must wear. (5)

[25]

NCV

QUESTION 5

5.1 MIG welding equipment operates with components that are live and not insulated. Contact with these components can cause deadly shocks or severe burns.

List SIX safety precautions that should be taken to prevent such injuries. (6)

5.2 FIGURE 2 (below) shows a typical MIG gun used during MIG welding. Label the items (5.2.1–5.2.8) in the ANSWER BOOK.

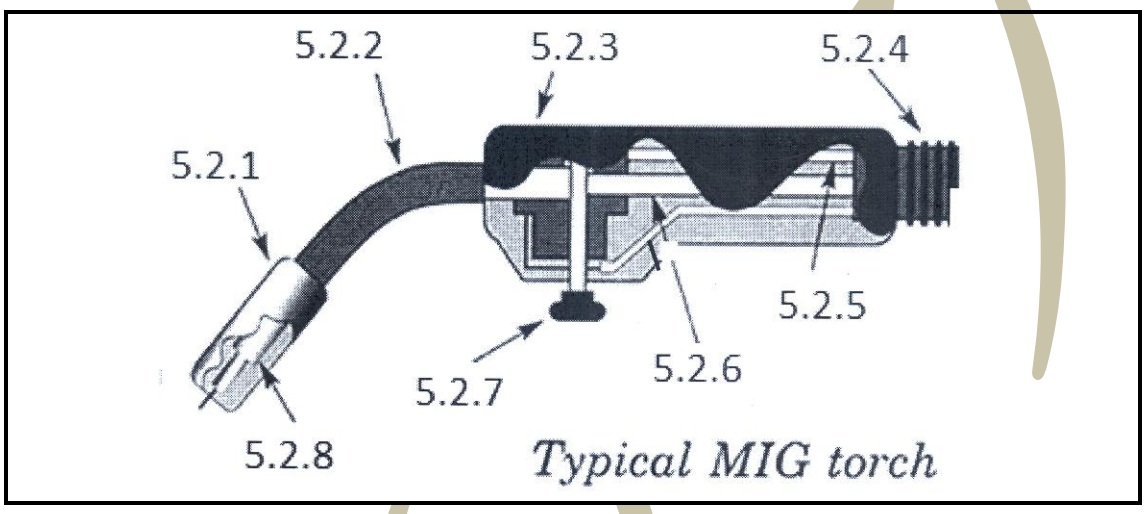

FIGURE 2 (8)

5.3 Inspections are very important after you have completed the welding process.

5.3.1 List THREE types of inspections done on the welding. (3)

5.3.2 Explain how each inspection has to done on the welding listed in QUESTION 5.3.1. (3)

[20]

TOTAL: 100

Copyright reserved