higher education & training

Department:
Higher Education and Training
REPUBLIC OF SOUTH AFRICA

NATIONAL CERTIFICATE (VOCATIONAL)

RENEWABLE ENERGY TECHNOLOGIES

NQF LEVEL 4

(12041044)

22 November 2019 (X-Paper)
09:00–12:00

This question paper consists of 7 pages.

Copyright reserved

TIME: 3 HOURS
MARKS: 100

INSTRUCTIONS AND INFORMATION

1. Read ALL the questions carefully.
2. Answer ALL the questions.
3. Number the answers according to the numbering system used in this question paper.
4. Start each question on a NEW page.
5. Write neatly and legibly.

Copyright reserved

QUESTION 1

1.1 State FOUR advantages of wind power systems. (4)

1.2 State FOUR disadvantages of wind power systems. (4)

1.3 It has been said that coastal regions are favourable locations for wind projects.

1.3.1 Do you think the above-mentioned statement is true? (1)

1.3.2 Name THREE provinces in South Africa with the most wind project installations. (3)

1.4 The term *hydrogen economy* refers to infrastructure supporting the energy requirements of a country based on the use hydrogen rather than fossil fuels.

1.4.1 Is the use of hydrogen as an energy system a new concept? Give reasons for your answer. (4)

1.4.2 State SIX reasons why hydrogen has NOT been implemented extensively in many parts of the world. (6)

1.5 With respect to the advantages of hydrogen and fuel-cell technology, indicate whether the following statements are TRUE or FALSE. Choose the answer and write only 'True' or 'False' next to the question number (1.5.1–1.5.3) in the ANSWER BOOK.

1.5.1 Due to the direct conversion of chemical energy into electrical energy, fuel cells are 2–3 times more efficient than internal combustion engines.

1.5.2 Establishing the necessary infrastructure for hydrogen production, transport and distribution would not require significant capital investment.

1.5.3 Fuel cells can be powered by hydrogen, the most abundant element on earth.

(3 × 1) (3)

[25]

QUESTION 2

2.1 Study the horizontal-axis wind turbine in FIGURE 1 (see below) to answer the following questions:

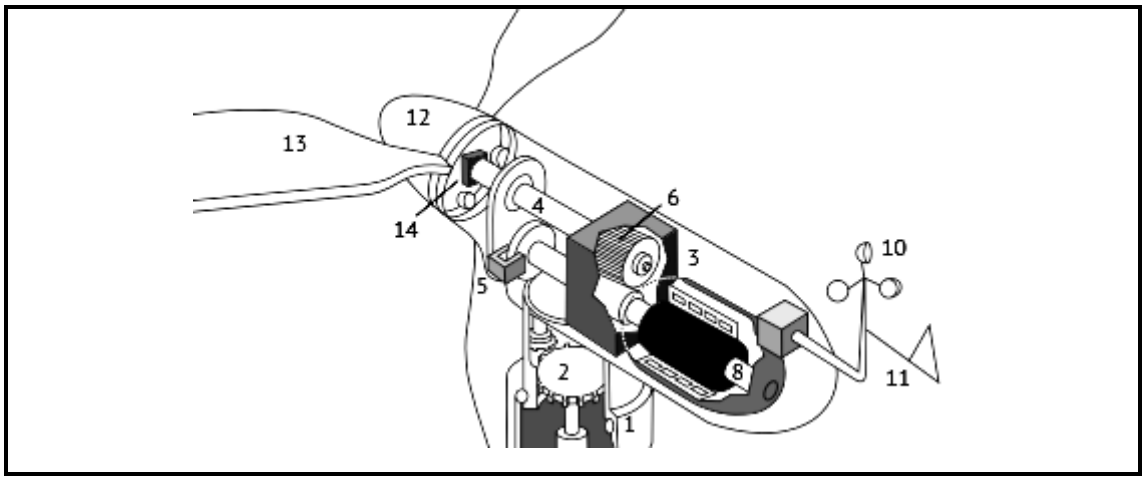

FIGURE 1

2.1.1 Name the components numbered 3, 4, 5 and 13. (4)

2.1.2 Which numbers refer to the gearbox and the generator? (2)

2.1.3 What materials are used generally to construct the tower? (2)

2.1.4 Explain the function of the yaw drive. (2)

2.2 Read the magazine extract in FIGURE 2 (see below) and answer questions (2.2.1–2.2.4) in the ANSWER BOOK.

Turning Water Into Fuel

Advances in electrolysis technology bring seawater one step closer as the fuel of the future.

[https://www.hakaimagazine.com/news/turning-water-into-fuel/]

FIGURE 2

2.2.1 Name ONE advantage of the electrolysis process. (1)

2.2.2 Name ONE key disadvantage of the electrolysis process. (2)

2.2.3 Based on the disadvantage mentioned in QUESTION 2.2.2, name a solution you could provide to eliminate this disadvantage. (2)

2.2.4 Briefly describe how water can be turned into fuel. (3)

2.3 ONE of the main reasons for not changing from conventional internal combustion engines to e-mobility is range anxiety, in other words, fear that the vehicle has insufficient range to reach its destination.

2.3.1 Should insufficient range be a concern for European drivers interested in e-mobility? Give reasons for your answer. (4)

2.3.2 Name THREE possible methods of charging electric vehicles. (3)
[25]

QUESTION 3

3.1 FIGURE 3 is a warning decal often seen next to the high 'voltage' components of electric vehicles (EV's). Explain why this warning decal appears on EV's but not on common internal combustion vehicles. Bear in mind that batteries may also be used for certain operations in internal combustion.

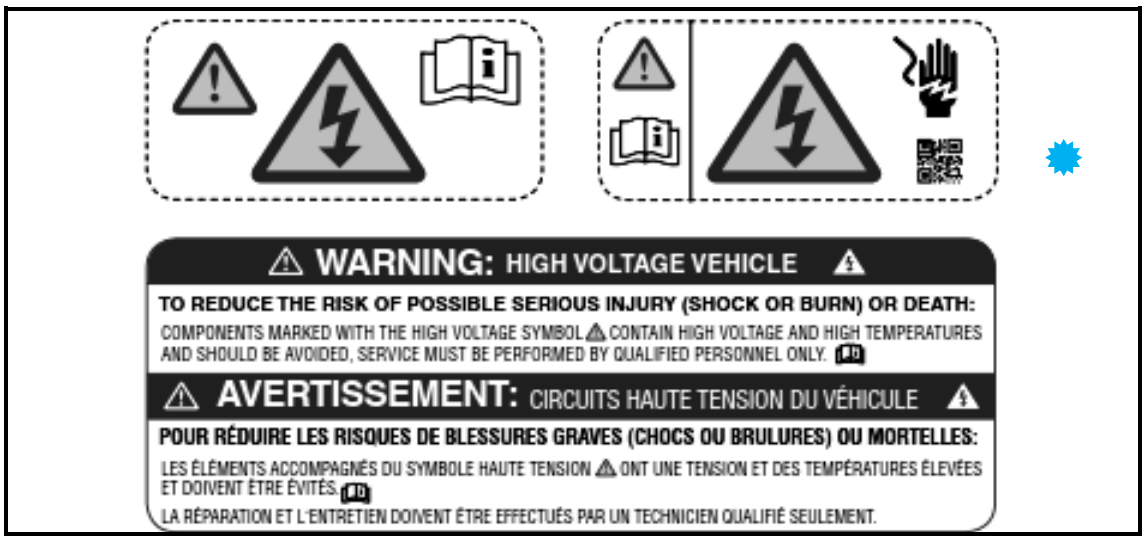

FIGURE 3 (7)

3.2 Managing electrical installation work requires suitable planning and the allocation of sufficient resources. One preferred mitigation method is the lockout/tag-out procedure. Consider the lockout/tagout procedure referred to above and indicate whether the following statements are TRUE or FALSE. Choose the answer and write only 'True' or 'False' next to the question number (3.2.1–3.2.8) in the ANSWER BOOK.

3.2.1 The circuit or equipment must first be de-energised.

3.2.2 Employees who work around the locked and tagged equipment must be trained about the hazards of electricity and the importance of leaving the locks and tags intact.

3.2.3 There should also be two qualified electricians working on direct-current electrical installations, that is, one should hold the positive cable and the other should hold the negative cable.

3.2.4 Every person working on the system must employ his/her own lock to isolate the energy.

3.2.5 Ensure that wind speeds are below 3 m/s when working at heights.

3.2.6 As each person completes his/her task, he/she must keep their padlock and tag in place to identify that he/she has completed the required work.

3.2.7 Before re-energising the system, all covers and panels must be reattached securely.

3.2.8 People who perform lockout/tag-out should receive training.

(8 × 1) (8)

[15]

QUESTION 4

4.1 Study the IKS wind trainer in FIGURE 4 and answer questions (4.1.1–4.1.4) in the ANSWER BOOK.

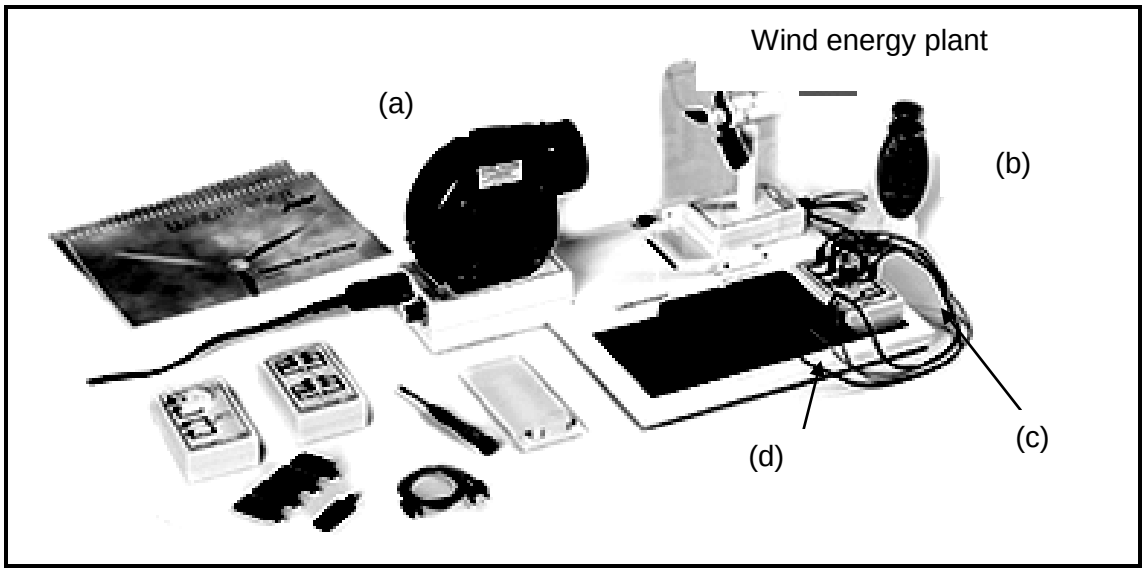

[http://www.iks-photovoltaik.de/fileadmin/iks/pdf/WTJ_EN.pdf]

FIGURE 4

4.1.1 Label the items (a–d) in FIGURE 4. (4)

4.1.2 Which one of the items in FIGURE 4 allows you to control the wind speed? (1)

4.1.3 What is the function of the item in your answer to QUESTION 4.1.2? (1)

4.1.4 Which items are necessary to record the I/V characteristic curve for any of the IKS student trainers? (1)

4.1.5 An experiment is conducted in which the number of blades is changed from 2 to 4 blades under constant wind speed conditions.

Which blade configuration do you expect to provide the highest power output? Give reasons for your answer. (3)

4.2 An experiment is conducted on an IKS H_2 Junior trainer to measure the efficiency of the electrolyser. The potential difference and hydrogen volume are given at two current settings at the respective time intervals.

Answer questions 4.2.1–4.2.6 by filling in the missing values in TABLE 1 and TABLE 2 below. Show calculations (17)

TABLE 1: Measurement data

I (mA)	V (V)	T (mins)	H_2 start vol. (ml)	H_2 end vol. (ml)	H_2 Δ vol (ml)
100	1,7	10	0	6	6
500	2,2	4	6	20	(4.2.1)

TABLE 2: Calculating data

I (mA)	$E_{ch} = H_o \times V_{exp}$ = …(J)	$E_{el} = U \times I \times t$ = …(J)	η = …(%)
100	70,2 J	(4.2.3)	(4.2.5)
500	(4.2.2)	(4.2.4)	(4.2.6)

4.3 State FOUR guidelines one should follow when working with sealed lead-acid batteries. (4)

4.4 Explain the difference between a *thermal circuit breaker* and a *magnetic circuit breaker.* (2)

4.5 With respect to battery technology, define the following terms:

4.5.1 Sulphation

4.5.2 Stratification

(2 × 1) (2)

[35]

TOTAL: 100

Copyright reserved