higher education & training

Department:
Higher Education and Training
REPUBLIC OF SOUTH AFRICA

MARKING GUIDELINE

NATIONAL CERTIFICATE (VOCATIONAL)

RENEWABLE ENERGY TECHNOLOGIES
NQF LEVEL3

7 December 2020

This marking guideline consists of 6 pages.

Copyright reserved

QUESTION 1

1.1
- Lower energy demand in buildings
- Replacing inefficient traffic lights and street lights with energy efficient technologies
- Supporting installation of solar water heating systems (3)

1.2
- Reduction of electrical energy consumption not fully achieved owing to focus on low electricity consumption areas (low-income households)
- Imported products dominating installations
- Most installations of poor-quality owing to lack of appropriate skills training
- Unreliable verification of numbers and locations of installed systems owing to lack of monitoring
- Lack of maintenance of systems leading to users reverting back to electric systems (Any 4 × 1) (4)

1.3
- Geysers use an electric heating element whereas SWH systems use sunlight (radiation) to heat water.
- Solar systems being nonelectrical have the ability to reduce use of electrical energy.
- Using SWH systems as alternative to electric geysers can help reduce GHG emissions associated with fossil fuel usage and peak load demand. (Any 2 × 1) (2)

1.4
- Reduced electricity bill
- Meeting hot water needs
- Lower carbon footprint
- Lower maintenance costs and higher durability compared to electric systems
- SWH systems can be combined with electric geysers to ensure hot water
- SWH systems provide hot water during load shedding and shield consumer from energy price increases (Any relevant 5 × 1) (5)

1.5
1.5.1 False
1.5.2 True
1.5.3 True
1.5.4 True
1.5.5 True
1.5.6 False

(6 × 1) (6)

[20]

QUESTION 2

2.1 2.1.1 Radiation is received on surface of object or substance and passed through material

2.1.2 Object or substance emits heat energy released into surrounding medium

2.1.3 Radiation is reflected off surface and redirected back into medium of origin without being absorbed

(3 × 2) (6)

2.2 2.2.1
- Perform installation in a safe manner.
- Take precautions to avoid damage to roof area.
- Position collectors for maximum performance but do not compromise acceptable mounting practices.
- Seal flash, hook, pipe and sensor penetrations in accordance with good roofing practises. Use permanent sealants such as silicone, urethane, butyl rubber.
- Place collectors in such a way that they remain easily accessible for maintenance. (5 × 1) (5)

2.2.2 Client must repair damage as system should never be installed on a damaged roof because roof envelope must carry weight of system (2)

2.2.3
- System placed in such a way that tank spans two main trusses braced to support installation
- Rafters to be strengthened and additional load spread to load-bearing point
- Thicker timbers added alongside rafters
- Cross-bracing rafters added
- Additional supporting struts added to truss (5 × 1) (5)

2.2.4 Four (two per collector) (1)

2.2.5 Assembly for tiled pitch roof with low inclination (1)

2.2.6
- Remove source of shading by pruning or removing trees
- Move collector higher up on roof or to part of roof not shaded
- Add additional collector to compensate for effect of shading (3)

Copyright reserved

2.2.7
- Place two strengthening beams along rafters and across two roof trusses for roof hook mounting bracket support
- Mount brackets onto support beams
- Mount frame onto front and back brackets
- If necessary, adjust back bracket for required inclination of collector
- Connect tank onto frame using correct brackets
- Mount collector onto frame using correct brackets or clamps
- Connect pipe work (7 × 1) (7)

[30]

QUESTION 3

3.1 3.1.1 Working at heights, unguarded, and moving machinery, burning, scalding and electrical hazards (Any 2 × 1) (2)

3.1.2 Lifting of heavy objects (collectors and tanks), poor posture and awkward movements (Any 2 × 1) (2)

3.2
- Edge protection system
- Fall protection system (2 × 1) (2)

3.3
- Place ladder at safe angle, pitched at about 75 degrees
- Angle can be achieved by 4:1 ratio
- For every 4 m up, base of ladder must be 1 m from wall/structure (3 × 1) (3)

3.4
- Electricity
- Roof surfaces
- Manual handling
- Weather conditions (4 × 1) (4)

3.5
- Flat roofs
- Fragile roofs
- Sloping roofs (Any 2 × 1) (2)

[15]

QUESTION 4

4.1 4.1.1 D
4.1.2 A
4.1.3 B
4.1.4 C

(4 × 1) (4)

4.2
- High-quality lightweight, durable and flexible material
- Good quality insulation
- Durability
- Simple and easy installation
- Variety of sizes and options (Any 3 × 1) (3)

4.3 Closed-loop systems use a heat exchanger/HTF loop to separate water cycle (for consumption) from heat transfer fluid (HTF) cycle.✓ Thus, two loops are required in system and in closed-loop it is the HTF (an anti-freeze glycol) that circulates in the collector, its piping system and the heat exchanger.✓ The heat transfer is thus termed as indirect. An advantage of indirect systems is that the HTF prevents freezing and consequently the system operates reliably in very cold climatic conditions.✓ (3)

4.4

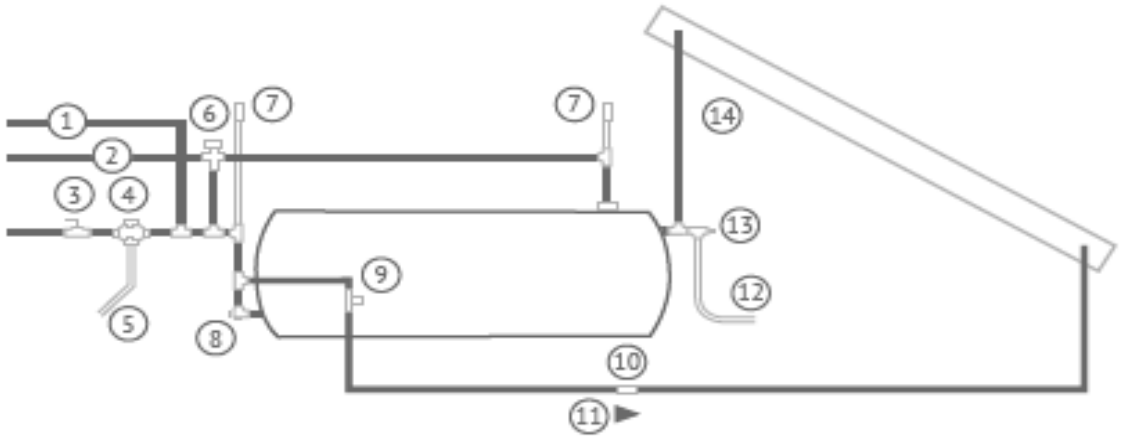

1 Cold water to house
2 Hot water to house
3 Stop cock
4 PR valve
5 PRV overflow
6 Mixing valve
7 Vacuum breaker
8 Drain cock
9 Pump
10 Non-return valve
11 Flow direction
12 TPV overflow
13 TP banjo valve
14 Hot water

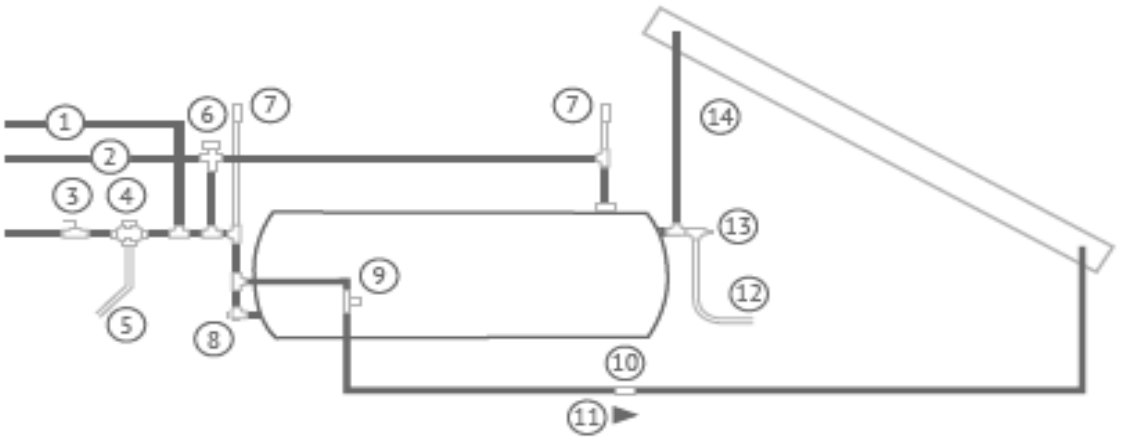

. (10)

4.5 Borosilicate glass (2)

4.6 Flow through pipe as well as thermal conduction from fluid to outer pipe shell is reduced. Excessive energy wastage and possibility of malfunctioning of system. (2)

4.7
- Pictures
- Measurements
- Marking drawings (3 × 1) (3)

4.8
- Components installed according to installation instructions in manual
- Collector installed close to storage tank
- Collector mounted with correct orientation and tilt angle
- Collector should be flush or rack mounted
- Collector and pipe work inclined to allow complete drainage
- Collector pairs mounted in parallel positioning
- Collector mounting bolts penetrating roof rafters
- Roof penetrations sealed
- Vacuum breakers/Air vents installed vertically on highest point of system

(Any 3 × 1) (3)

4.9

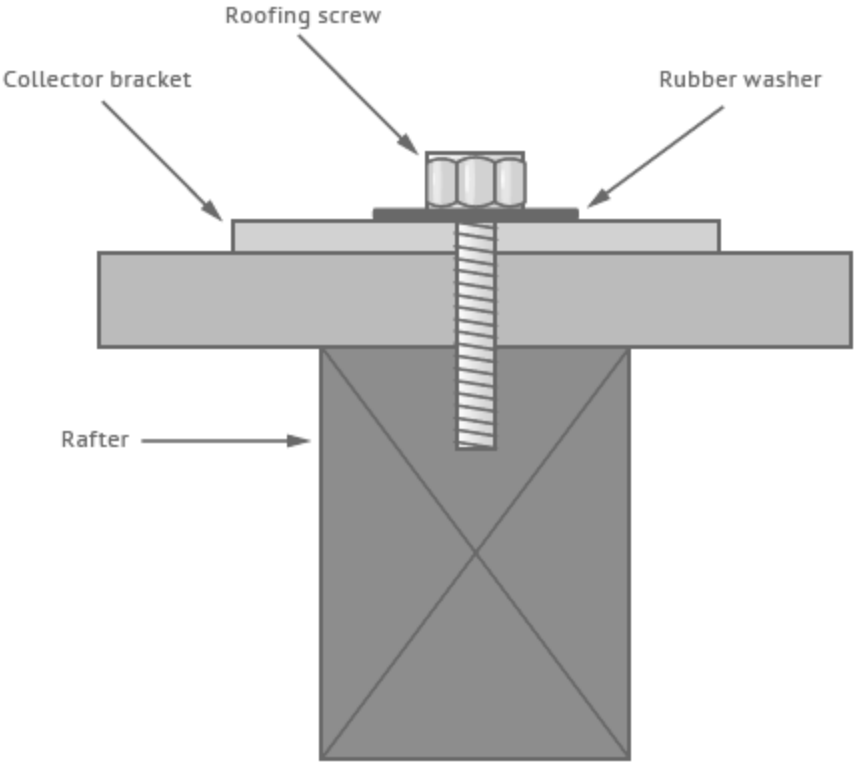

(5)
[35]

TOTAL: 100

Copyright reserved