higher education & training

Department:
Higher Education and Training
REPUBLIC OF SOUTH AFRICA

NATIONAL CERTIFICATE (VOCATIONAL)

RENEWABLE ENERGY TECHNOLOGIES
NQF LEVEL 3

(12041043)

9 March 2018 (X-Paper)
09:00–12:00

This question paper consists of 6 pages and 1 formula sheet.

Copyright reserved

TIME: 3 HOURS
MARKS: 100

INSTRUCTIONS AND INFORMATION

1. Answer ALL the questions.
2. Read ALL the questions carefully.
3. Number the answers according to the numbering system used in this question paper.
4. Round off values to the THIRD decimal place.
5. Draw a line between questions.
6. Write neatly and legibly.

NCV

QUESTION 1

1.1 Mr. Brown has a faulty electric geyser and he wants to buy a new geyser. As a solar water heating student you have to convince Mr. Brown, a home-owner, regarding the benefits of Solar Water Heating systems by using the following points:

1.1.1 Explain the environmental benefits of Solar Water Heating Technology in terms of reductions in CO_2 emissions. (2)

1.1.2 Give SEVEN benefits of using a Solar Water Heating system. (7)

1.1.3 Name FIVE savings benefits from installing a solar water heating system. (5)

1.2 To further compare the two systems (electric and solar), illustrate to Mr Brown what the payback time would be for the installation of a solar water heating system. Write the answer next to the question number (12.1–1.2.3) in the ANSWER BOOK.

VARIABLES	DATA AND CALCULATIONS
Average consumption of electrical energy per month (Household)	1 800 kWh
Electrical energy consumption of a geyser per month	400 kWh
Cost per kWh (cost depend on region/year and municipality)	R1
Electrical energy for hot water generation saved per month by conversion from electric geyser to solar water system	250 kWh
System and installation costs for a 150 litre high-pressure solar water heating system	R24 000,00
Cost of equally sized electric geyser	R8 000,00
Total extra cost for the solar water heating system	1.2.1
Monthly kWh saving in Rand	1.2.2
Payback period in years	1.2.3

(3 × 2) (6)

[20]

QUESTION 2

2.1 List THREE essential components of a flat-plate collector. (3 × 2) (6)

2.2 Explain how the following terms can ensure optimal hot water supply and delivery on a solar water heating system.

2.2.1 Proximity

2.2.2 Pipe insulation

2.2.3 Roof pitch

(3 × 2) (6)

2.3 In your own words, explain what happens during the experiment where potassium permanganate crystals are added to cold water in a glass container while it is being heated and how this relates to SWH systems. (6)

2.4 Define the following processes as it applies to radiation:

2.4.1 Absorption

2.4.2 Reflectance

(2 × 2) (4)

2.5 What can be done to minimise the effects of shading on a solar water heating system? (3)

2.6 Indicate whether the following statements are TRUE or FALSE: Choose the answer and write only 'true' or 'false' next to the question number (2.6.1–2.6.5) in the ANSWER BOOK.

2.6.1 It is important to place the Solar Water Heating System in such a way that the tank spans at least two main trusses.

2.6.2 Rack mounting is when collectors are mounted directly onto the roof's surface.

2.6.3 Shading increases collector efficiency and should not be avoided.

2.6.4 Conduction occurs when two objects or substances at different temperatures are in direct contact with each other.

2.6.5 The orientation of the collector towards the west is ideal in the southern hemisphere.

(5 × 1) (5)

[30]

Copyright reserved

QUESTION 3

3.1 What important safety rules will you recommend when installing a hot water geyser? (4)

3.2 Describe THREE safety factors that will ensure that you can safely climb a ladder to access a roof. (3)

3.3 Name the THREE main components of a fall arrest system. (3)

3.4 What should you do before using a portable ladder? (4)

3.5 Indicate whether the following statement is TRUE or FALSE: Write only 'true' or 'false'.

A competent person must be available to set up the scaffold. (1)

[15]

QUESTION 4

4.1 Identify the plumbing tools in the picture and describe their uses. Write only the name of each tool and its use next to the question number (4.1.1–4.1.6) in the ANSWER BOOK.

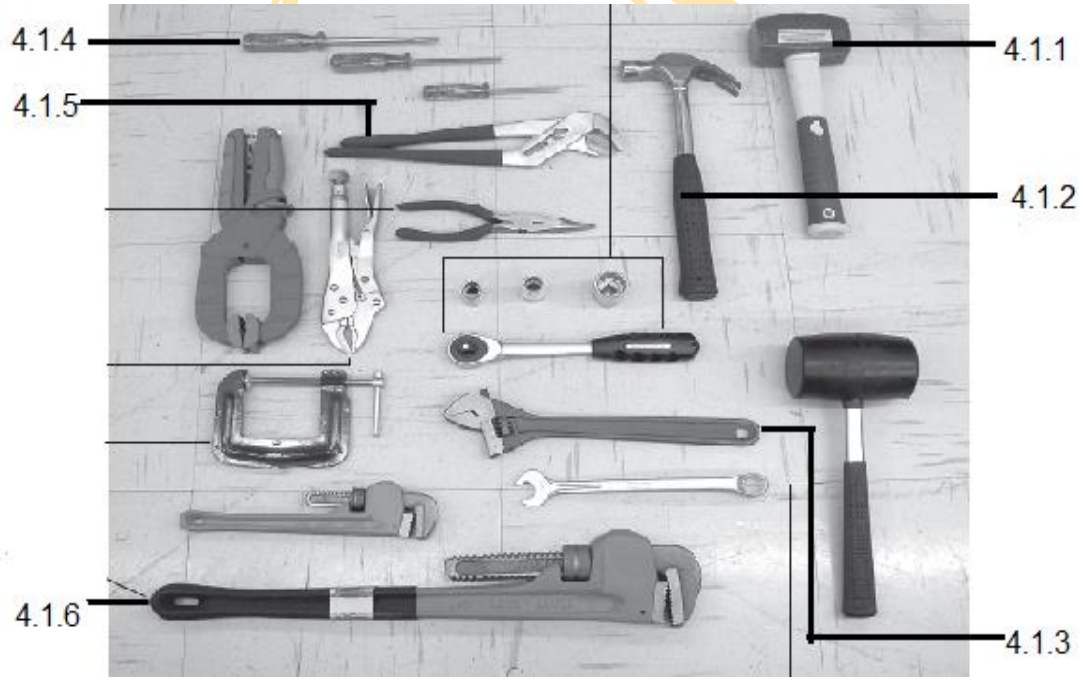

(6 × 2) (12)

4.2 The sketches in FIGURE 1 below illustrate SIX compression type fittings associated with copper pipes. Write only the correct name of each fitting next to the question number (4.2.1–4.2.6) in the ANSWER BOOK.

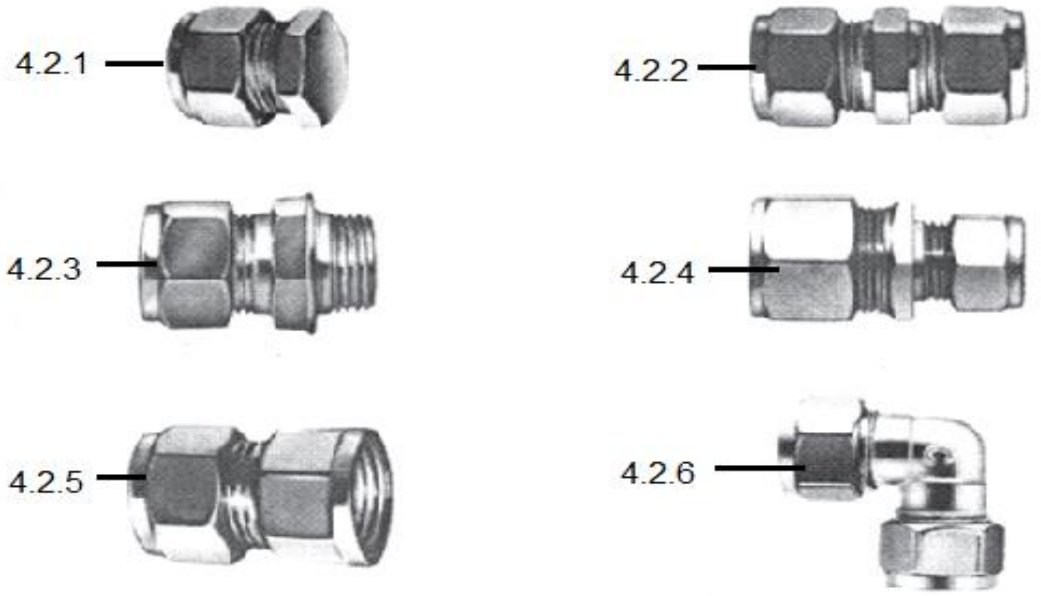

FIGURE 1 (6)

4.3 What would the solder finish around the edge of a completed capillary joint look like if the soldering process was done correctly? (2)

4.4 Make a neat sketch of a tube–tank interaction of a low-pressure evacuated tube system. (5)

4.5 Determine the correct possible causes and remedies/corrective action: valve testing and fault-findings in a SWH system.

VALVES	POSSIBLE CAUSES	REMEDIES/CORRECTIVE ACTION
Fault: System does not produce enough hot water.		
Mixing valve	4.5.1	4.5.2
Check valve	4.5.3	4.5.4
Isolation valve	4.5.5	4.5.6

(6 × 1) (6)

4.6 Give TWO disadvantages and TWO advantages of an indirect system. (2 × 2) (4)

[35]

TOTAL: 100

Copyright reserved

FORMULA SHEET

Δ **= V x C x** Δ**T**

Q = C x m x Δ**T**

Copyright reserved