higher education & training

Department:
Higher Education and Training
REPUBLIC OF SOUTH AFRICA

NATIONAL CERTIFICATE (VOCATIONAL)

RENEWABLE ENERGY TECHNOLOGIES
NQF LEVEL 2

(12041042)

22 November 2018 (X-Paper)
09:00–12:00

This question paper consists of 8 pages and 1 formula sheet.

Copyright reserved

TIME: 3 HOURS
MARKS: 100

INSTRUCTIONS AND INFORMATION

1. Answer ALL the questions.
2. Read ALL the questions carefully.
3. Number the answers according to the numbering system used in this question paper.
4. Show ALL steps used in calculations.
5. Write neatly and legibly.

Copyright reserved

QUESTION 1

1.1 Indicate whether the following statements are MITIGATION practises or ADAPTATION practises. Choose the answer and write only 'Mitigation' or 'Adaptation' next to the question number (1.1.1–1.1.5) in the ANSWER BOOK.

1.1.1 Use of shallow tube wells

1.1.2 Monitoring the number of grazing animals and cut trees

1.1.3 Increased landfill methane recovery

1.1.4 Hybrid vehicles and electric cars

1.1.5 Rainwater harvesting

(5 × 1) (5)

1.2 Construct a summary of The Integrated Resource Plan (IRP) 2010 Update. Your summary must answer the following questions:

- What is the IRP?
- Who developed the IRP?
- What does the IRP address?
- What must the IRP take into account? (5)

1.3 Identify each of the following technologies as either RENEWABLE or NON-RENEWABLE energy resources. Choose the answer and write only 'Renewable' or 'Nonrenewable' next to the question number (1.3.1–1.3.3) in the ANSWER BOOK. Give a reason for your answer.

1.3.1 Bioenergy

1.3.2 Nuclear

1.3.3 Geothermal

(3 × 2) (6)

1.4 The sun is the principal source of all energy.

Explain what is meant by this statement. (4)

[20]

QUESTION 2

2.1 A fluorescent light bulb has a power rating (P_{input}) of 55 watts. The bulb was activated for 50 seconds and produced a thermal energy (heat) with a value of 1 000 joules during this period.

Determine the energy efficiency of the light bulb in percentage (%). (6)

2.2 Answer the following questions related to the atomic structure in FIGURE 1 below.

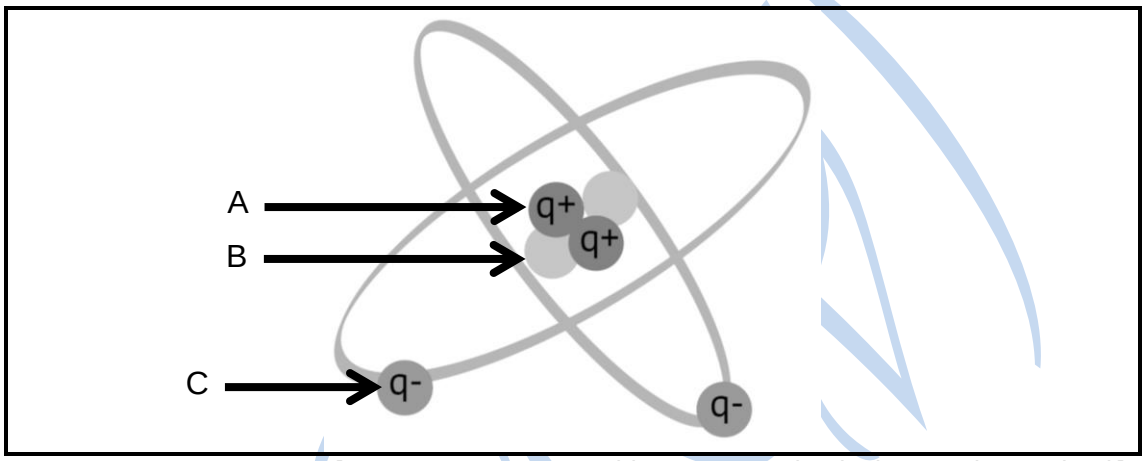

[Source: *S4GJ Renewable Energy Technologies Level 2 Textbook*]

FIGURE 1

2.2.1 Name the labelled particles by writing the answer next to the letter (A–C) in the ANSWER BOOK. (3)

2.2.2 Explain what an *electric charge* is. (4)

2.3 An electric kettle is connected to a 220 V AC supply. The resistance of its heating element is 25 ohms.

Determine each of the following:

2.3.1 Current in ampere

2.3.2 Power rating of the kettle

(2 × 2) (4)

2.4 An electric heater is connected to a 230 V supply for 15 minutes. The heater generates 250 kJ of heat energy within this time.

Calculate the power rating of the heater. (2)

2.5 FIGURE 2 shows an image of a switched range multimeter.

Explain how you would set up the multimeter to obtain the readings of each of the scenarios below. Write the answer next to the question number (2.5.1–2.5.3) in the ANSWER BOOK.

Example: *Black probe into VΩmA*
Red probe into COM
Dial indicator set at 2000 mV dc

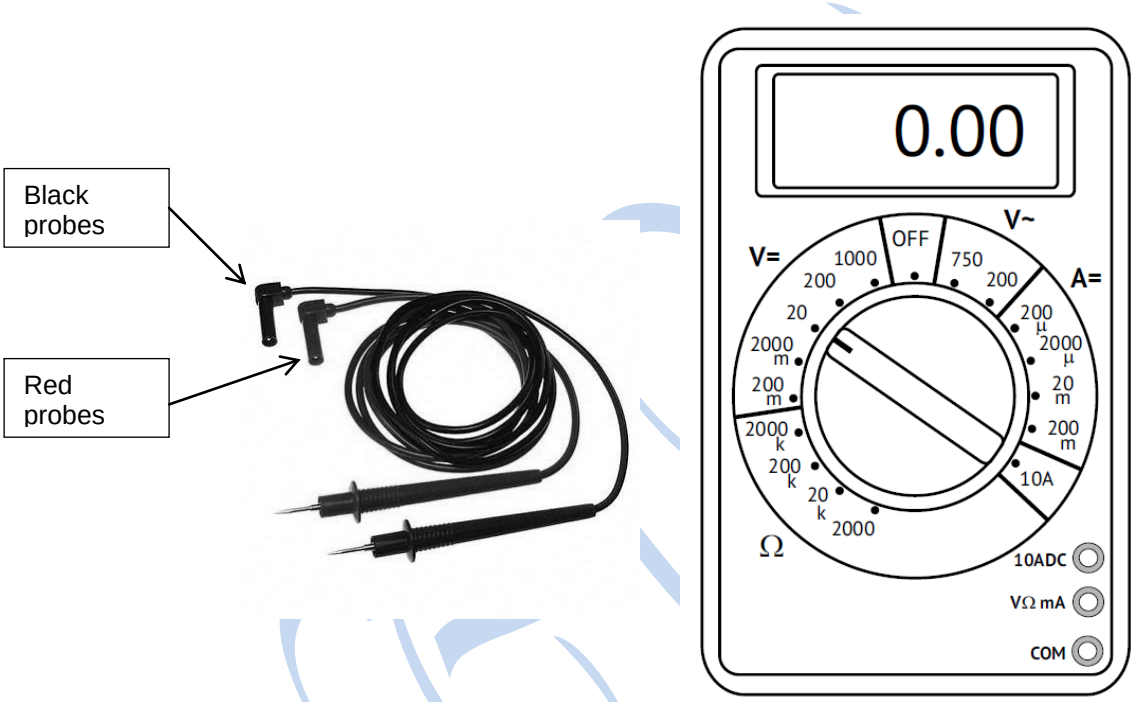

[Source: *S4GJ Renewable Energy Technologies Level 2 Textbook*]

FIGURE 2

2.5.1 Voltage of a single-phase household kettle

2.5.2 Output voltage of TWO 25,4 V photovoltaic panels connected in series

2.5.3 Current reading of a battery bank with a 7 Ah current rating

(3 × 2) (6)
[25]

QUESTION 3

3.1 Rearrange the hazard control measures below by writing them down from least effective to the most effective.

- Replace hazard
- Change work processes
- Protect against hazard
- Remove hazard
- Isolate hazard (5)

3.2 Study the cartoon in FIGURE 3 and answer the questions.

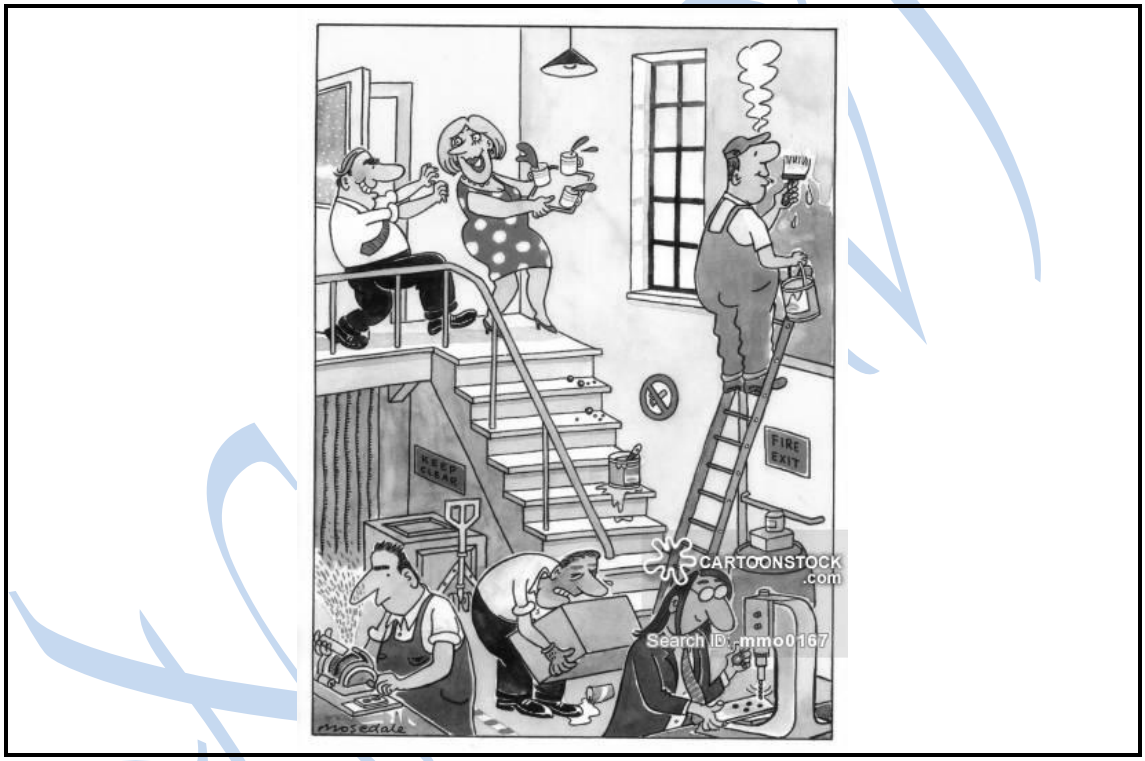

[Source: https://www.cartoonmotivators.com/CareHomeHazards.html]

FIGURE 3

3.2.1 Identify THREE unsafe conditions.

3.2.2 Identify THREE unsafe acts.

(2 × 3) (6)
[11]

QUESTION 4

Load shedding has an effect on every household. Alternative options may be used to energise the lighting, refrigerator and television of a household.

A photovoltaic (PV) system may be a viable alternative to consider.

4.1 Which type of PV system would be best suited to load-shedding? (1)

4.2 Describe this particular type of PV system. (5)

4.3 There may be dangers when a battery bank is overcharged.

4.3.1 What device is used to ensure that the battery will not experience overcharging? (1)

4.3.2 Explain the function of this particular device. (3)

4.4 Draw a schematic wiring diagram of the PV system being considered. Clearly label all the components used in the diagram. (10)

4.5 Determine the monthly (30-day month) energy cost for using the household appliances above. The energy rate is R1,60/kWh.

Use the appliance data provided in the table below.

LOADS	QUANTITY	POWER RATING	HOURS IN USE PER DAY
Refrigerator	×1	800 W	4
Television	×1	300 W	8
Lighting	×8	25 W each	10

(8)

4.6 Calculate how much roof surface area is required to generate 1 kilowatt peak (kWp) power if one module is 80 cm × 150 cm in size. Each module generates 200 W. The answer must be in m^2. (5)

Copyright reserved

4.7 FIGURE 4 shows the I-V curves generated when testing the performance of a PV module.

Give a conclusion on the test results completed on ONE PV module seen in FIGURE 4.

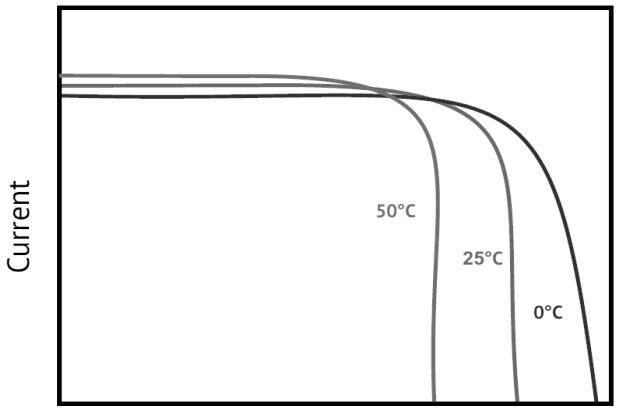

[Source: *S4GJ Renewable Energy Technologies Level 2 Textbook*]

FIGURE 4 (3)

4.8 Indicate whether the following statements are TRUE or FALSE regarding factors affecting the performance of PV modules. Choose the answer and write only 'True' or 'False' next to the question number (4.8.1–4.8.5) in the ANSWER BOOK.

4.8.1 The amount of solar radiation affects the performance of PV modules.

4.8.2 Cold conditions reduce the performances of PV modules.

4.8.3 Tiled roofs reduce the performance of PV modules.

4.8.4 Module mismatching affects the performance of PV modules.

4.8.5 Shading improves performance of PV modules.

(5 × 1) (5)

4.9 List THREE differences between crystalline and thin film PV technologies. (3)

[44]

TOTAL: 100

Copyright reserved

RENEWABLE ENERGY TECHNOLOGIES LEVEL 2

FORMULA SHEET

Any other application equation or formula may be used.

$$W = F \times s$$

$$P = \frac{W}{t}$$

$$E = P \times t$$

$$\eta = \frac{Output}{Input} \times 100 \qquad Output = Input - Losses$$

$$Q = I \times t$$

$$V = \frac{W}{Q} \qquad V = I \times R$$

$$P = V \times I \qquad P = I^2 \times R \qquad P = \frac{V^2}{R}$$

$$V_T = V_1 + V_2 + V_3 \qquad V_T = V_1 = V_2 = V_3$$

$$I_T = I_1 + I_2 + I_3 \qquad I_T = I_1 + I_2 + I_3$$

$$R_T = R_1 + R_2 + R_3 \qquad \frac{1}{R_T} = \frac{1}{R_1} + \frac{1}{R_2} + \frac{1}{R_3}$$

$$R = \frac{\rho \times l}{A}$$

$$E_v = \frac{P \times K_\lambda}{A}$$

Copyright reserved