higher education & training

Department:
Higher Education and Training
REPUBLIC OF SOUTH AFRICA

NATIONAL CERTIFICATE (VOCATIONAL)

REFRIGERATION PRACTICE
NQF LEVEL 3

(6030053)

7 December 2020 (X-paper)
09:00–12:00

This question paper consists of 7 pages.

379Q1N2007

Copyright reserved

TIME: 3 HOURS
MARKS: 100

INSTRUCTIONS AND INFORMATION

1. Answer all the questions.
2. Read all the questions carefully.
3. Number the answers according to the numbering system used in this question paper.
4. Start each section on a new page.
5. Use only black or blue pen.
6. Write neatly and legibly.

Copyright reserved

QUESTION 1

Choose an item from COLUMN B that matches a description in COLUMN A. Write only the letter (A–N) next to the question number (1.1–1.5) in the ANSWER BOOK.

COLUMN A		COLUMN B	
1.1	The process of removing undesirable chemicals, biological contaminants, suspended solids and gases from water	A	water filter
		B	electromotive force
		C	screen
1.2	A chemical substance intended to destroy, deter, render harmless, or exert a controlling effect on any harmful organism	D	force
		E	latent heat
1.3	It is exchanged by a thermodynamic system that changes the temperature of the system without changing some variables such as volume or pressure	F	sensible heat
		G	water treatment
		H	biocide
1.4	A device which removes impurities from water by means of a physical barrier, chemical, or biological process	I	energy
		J	distillation system
1.5	A process that makes water more acceptable for a specific end use	K	insulator
		L	water softener
		M	power
		N	water purification

(5 × 1) **[5]**

QUESTION 2

2.1 What is the volume of 5 kg of an ideal gas, having a specific gas constant of 287 J/(kg K) at a pressure of one standard atmosphere and a temperature of 25 °C? (3)

2.2 A mass of an ideal gas occupies 0.75 m^3 at 20 °C and is heated at a constant pressure to 90 °C.

What is the final volume? (3)

2.3 A tube contains an oil of specific gravity 0.9 to a depth of 120 cm.

Find the gauge pressure at this depth (in kN/m^2). (4)

2.4 On a piston with a 10 cm diameter, a force of 1000 N is uniformly applied.

Find the pressure on the piston. (5)

2.5 Two cylindrical vessels of 2 m^3 each are interconnected through a pipe with a valve. Initially, the valve is closed, and one vessel has 20 kg air and the other has 4 kg of air.

If the system is at a temperature of 27 °C and initially insulated, determine the final pressure in the vessels after the valve is opened to attain equilibrium. (For air, use R = 287 J/kg K.) (5)

[20]

QUESTION 3

3.1 The code of practice requires that all exposed conductive parts of an installation be earthed. Explain what *electrical earthing* means. (2)

3.2 Give THREE reasons why proper earthing is important in electrical installations. (3)

3.3 Upon arriving at your friend's house, you found him ironing his shirt. You noticed that the earth conductor was deliberately disconnected. As a qualified electrician, explain which steps you would take to prevent an unnecessary accident. (4)

Copyright reserved

3.4 An electric motor is an electrical machine that converts electrical energy into mechanical energy. Name the parts of the following electric motor labelled (3.4.1–3.4.5) in FIGURE 1.

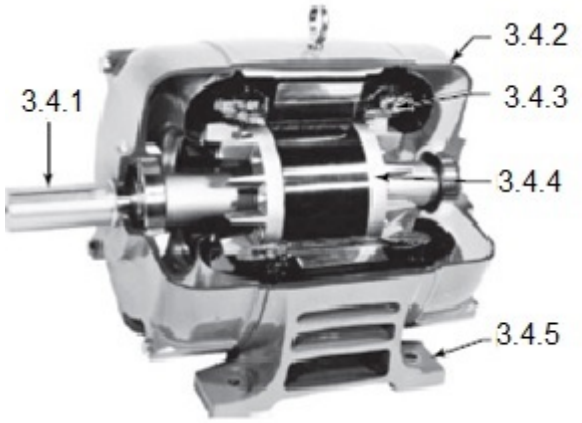

FIGURE 1

(5)

3.5 You are hired as a technician by XYZ Stores. The client has a manually operated entrance gate and requests you to motorise the gate. The motor that is available draws a maximum current of 4.8 A.

Draw up a complete part list for this job. Include the component sizes. (6)

3.6 As an artisan, you are required to install two socket outlets in a new installation.

Show by means of a neat, labelled circuit diagram how you would achieve this. (5)

[25]

QUESTION 4

4.1 Give an appropriate name for each of the following refrigeration tools:

4.1.1



4.1.2



4.1.3



4.1.4 

4.1.5 

4.1.6 

(6 × 1) (6)

4.2 The correct voltage is vital for all appliances. What will be the effect of each of the following voltages on appliances?

4.2.1 Too low a voltage
4.2.2 Too high a voltage

(2 × 2) (4)

4.3 Explain the operation of the defrost system on a domestic refrigeration system. (5)

4.4 If an expansion valve is protected from dirt and other foreign matter by a liquid line filter-drier, the most likely cause for malfunction is a loss of charge from the valve power element.

List FIVE steps you will follow to test for an inoperative power element. (10)
[25]

QUESTION 5

5.1 What is the objective of SANS 10147? (2)

5.2 Define the following terms:

5.2.1 Competent person

5.2.2 Fusible plug

5.2.3 Pressure relief valve

(3 × 2) (6)

5.3 List FOUR ways of identifying the type of refrigerant in the container. (4)

5.4 What is the difference between isometric and oblique drawings? (4)

Copyright reserved

5.5 Complete the following diagram labelled FIGURE 2 by writing the correct term next to question number (5.5.1–5.5.9) in the ANSWER BOOK.

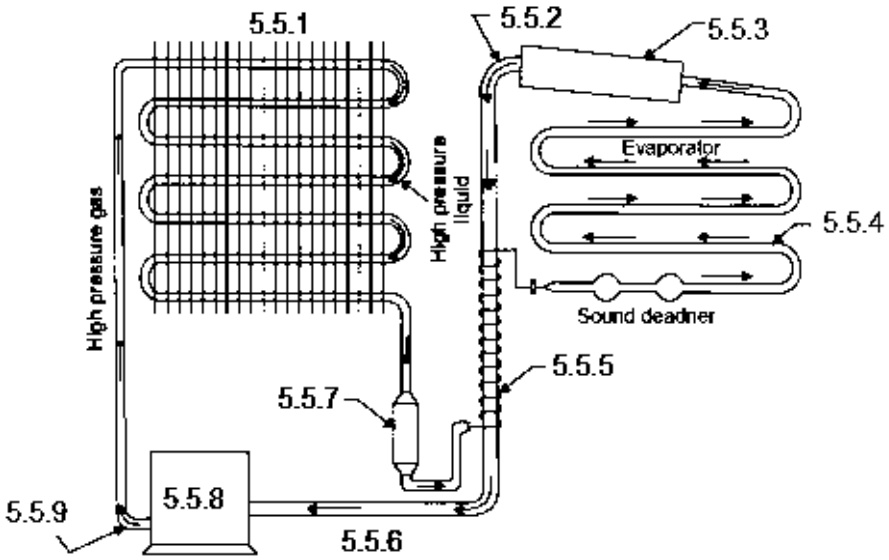

FIGURE 2 (9)

[25]

TOTAL: 100

Copyright reserved