higher education & training

Department:
Higher Education and Training
REPUBLIC OF SOUTH AFRICA

NATIONAL CERTIFICATE (VOCATIONAL)

REFRIGERATION PRINCIPLES
NQF LEVEL 2

(6030052)

22 November 2019 (Y-Paper)
13:00–16:00

This question paper consists of 8 pages.

Copyright reserved

TIME: 3 HOURS
MARKS: 100

INSTRUCTIONS AND INFORMATION

1. Answer ALL the questions.
2. Read ALL the questions carefully.
3. Number the answers according to the numbering system used in this question paper.
4. Write neatly and legibly.

Copyright reserved

QUESTION 1

1.1 Draw a block diagram of a vapour compression refrigeration system. Indicate the following components clearly in order on your drawing:

1.1.1 Condenser

1.1.2 Evaporator

1.1.3 Filter dryer

1.1.4 Compressor

1.1.5 Liquid receiver

1.1.6 Accumulator

1.1.7 Expansion valve

(9)

1.2 What is the purpose of the following components?

1.2.1 Crankcase heater

1.2.2 Mufflers

(2 × 2) (4)

1.3 Convert 200 °C to Kelvin. (1)

1.4 What is the condition of the refrigerant at the outlet of the expansion device? (1)

[15]

QUESTION 2

2.1 What is the difference between an *alternating current* and a *direct current*? (4)

2.2 Briefly explain the following:

2.2.1 Series circuit (1)

2.2.2 Series parallel circuit (2)

2.3 Show by means of a circuit diagram how two resistors in parallel can be connected to one resistor in series, all across the supply voltage. (2)

2.4 Indicate whether the following statement is TRUE or FALSE. Choose the answer and write only 'True' or 'False' next to the question number (2.4) in the ANSWER BOOK.

Copper is a good conductor of electricity. (1)

[10]

Copyright reserved

QUESTION 3

3.1 Name an instrument that consists of several functions in one unit and is used in electrical circuits. (1)

3.2 A bending spring is the simplest type of bending tool.

List TWO uses of a bending spring. (2)

3.3 FIGURE 3 shows a gauge manifold. Identify the parts and write the answer next to the question number (3.3.1–3.3.6) in the ANSWER BOOK.

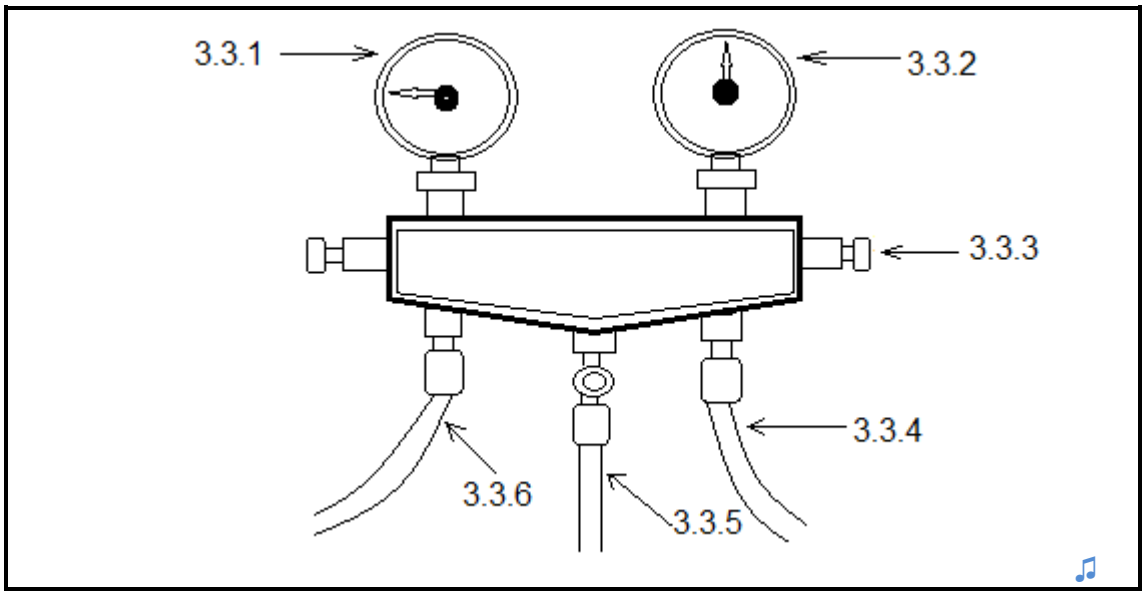

FIGURE 3 (6)

3.4 State THREE instructions that must be followed when taking care of a flaring tool. (3)

[12]

QUESTION 4

4.1 Identify the type of refrigerant, given the following colours on their containers:

4.1.1 Light green

4.1.2 Light maroon

4.1.3 Orange

(3 × 1) (3)

4.2 When a worker works with refrigerant (particularly in the liquid phase), they should wear appropriate safety equipment.

Give ONE word that describes the following:

4.2.1 Equipment that protects the eyes ♫

4.2.2 A non-absorbent material that protect the hands

4.2.3 Protection against liquid splashes on the body, arms and legs

(3 × 1) (3)

4.3 Explain the procedure to be followed in the event of a fire when working with refrigerants. ♫ (2)

[8]

QUESTION 5

5.1 Briefly explain the importance of keeping piping clean and dry. (4)

5.2 Name TWO components in-between which a capillary tube fits on a refrigeration system. (2)

5.3 Distinguish between *silver soldering* and *brazing.* ♫ (4)

5.4 Name the following fitting material:

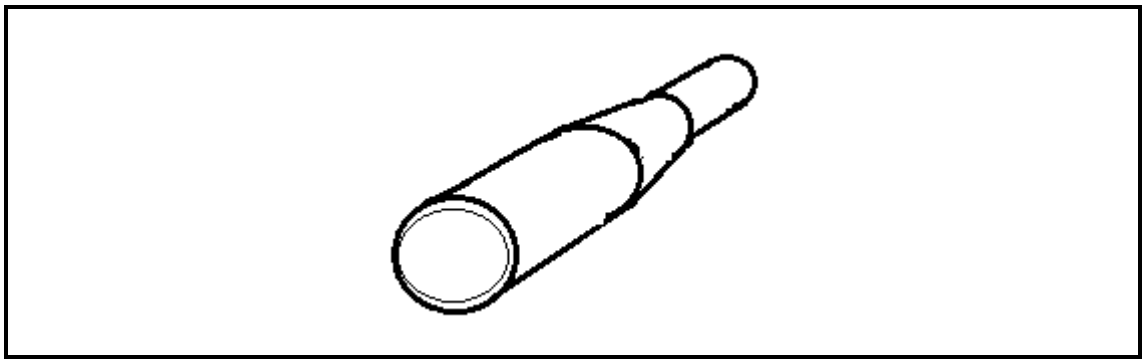

(1)

5.5 What is a *solvent*? (2)

5.6 Choose a description from COLUMN B that matches the type of solvent in COLUMN A. Write only the letter (A–C) next to the question number (5.6.1–5.6.3) in the ANSWER BOOK.

COLUMN A		COLUMN B	
5.6.1	Trichloroethane	A	frequently used in refrigeration
5.6.2	Trichloroethylene	B	used in small-scale operations
5.6.3	Carbon tetrachloride	C	used in equipment specifically designed for degreasing a well-ventilated area free from any draught

(3 × 1) (3)

5.7 At what temperature does the suction line drop when it is cold? (1)

5.8 List FIVE consequences of using insufficient insulation. (5)
[22]

QUESTION 6

6.1 Explain the purpose of the following fixing tools:

6.1.1 Crimping tool

6.1.2 Open-ended spanner

6.1.3 Cable knife

6.1.4 Wire stripper

(4 × 2) (8)

6.2 Choose a description from COLUMN B that matches the type of key in COLUMN A. Write only the letter (A–D) next to the question number (6.2.1–6.2.4) in the ANSWER BOOK.

COLUMN A		COLUMN B	
6.2.1	Woodruff key	A	clamps a driving hub into position along a shaft
6.2.2	Feather key	B	when the hub is in position and the key must be driven into place
6.2.3	Gib-head key	C	fastens either in the shaft or in the hub of a member sliding on it
6.2.4	Taper key	D	used in machine tool construction and adjusts itself to its seat

(4 × 1) (4)
[12]

QUESTION 7

7.1 Choose ONE step which is NOT true when identifying and inspecting refrigerant containers:

A Read the identification on the containers.
B Charge the wrong refrigerant into the system.
C Look at the colour of the container.
D Take a sample for laboratory testing. (1)

7.2 Given that the TM = 10,8 kg and WC = 25,3 kg, calculate the maximum gross mass of the cylinder. (2)

7.3 Explain *evacuation*. (2)

7.4 What do the following stand for when checking the markings on a cylinder for correctness?

7.4.1 R-number

7.4.2 WC

7.4.3 TM

(3 × 1) (3)

7.5 Determine the maximum quantity of refrigerant that can be charged into a container with an original mass of 12,5 kg. The final maximum gross mass of the cylinder is 26,5 kg. (2)

7.6 For refrigeration to work efficiently, it must be free from contaminants.

7.6.1 Which tool will be used to remove the presence of moisture in the system? (1)

7.6.2 What is the consequence of moisture in a refrigeration system? (2)

7.6.3 What happens when oil is contaminated and not regularly changed? (1)

7.7 If a leak is found on the points below, what corrective action must be followed?

7.7.1 Flaring fitting

7.7.2 Flange connection

7.7.3 Brazed point

(3 × 1) (3)

Copyright reserved

7.8 What is the simplest and safest method of leak testing that can even be performed by an inexperienced person? ♫ (1)

7.9 State the THREE disadvantages of the method referred to in QUESTION 7.8 above. ♫ (3)
[21]

TOTAL: 100

Copyright reserved